Englisch

Operating Manual

Electromagnetic flowmeter

MFI447

Unternehmen / Marken der GHM

TA TELEMETRIE & AUTOMATION

IMTRON

Martens

HONSBERG

GREISINGER

www.ghm-messtechnik.de

Please keep for future. **V2.03**

Content

1. Intended Applications (Operational Areas)

See Chapter “Product Description” for detailed information on the areas of applications for the device.

The operational safety of the device is only ensured if it is used as intended, in accordance with the operating manual.
Due to safety and warranty concerns, operations other than the ones described in the manual may only be performed by personnel authorized by the manufacturer. Unauthorized changes or alterations are expressly prohibited.
If this device is not used appropriately or as intended, it may present certain risks for the user.

The device is not suitable for use in explosive areas and security-relevant system parts according to SIL.

General Safety and Usage Instructions
This operating manual must be kept locally to be consulted by the professional staff at any time. All operations described in this operator’s manual may only be performed by trained professionals wearing adequate protective clothing and authorized by the operator.

1.1 Safety Signs and Symbols

Warnings are marked as described in Table 1 in this document.

DANGER	Warning! This symbol warns of immediate danger, death, serious bodily injuries, or serious damage to property, if the operational procedures are ignored.
	Caution! This symbol warns of possible dangers or damaging situations which cause damage to the device or the environment if the operational procedures are ignored.
	Note! This symbol refers to procedures that have an indirect effect on the operation, or may trigger an unforeseen reaction, if the operational procedures are ignored.

Table 1

1.2 Safety Notes

Please read the product description before the initial operating the device. Be sure that the product is suitable, without reservation, for the intended application.
The operator is responsible for the trouble-free operation of the device. The operator is obligated to assess and observe compliance with the required working and safety procedures of the relevant regulations.

1.3 Product Liability and Warranty

Disclaimer:
The content of the operator's manual has been tested for agreement with the device described. However, discrepancies cannot be ruled out, which prevents us from guaranteeing complete agreement. The information and specifications in this manual are being reviewed regularly; necessary corrections will be part of subsequent printings. Technological alterations reserved. In addition, all claims are based on the applicable General Terms of Delivery for Products and Services in the Electrical Industry.

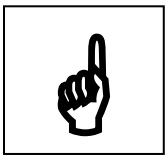

Unfortunately, Martens Elektronik will not be able to check or repair devices without the provided completed form (see Item 8, Returns).

1.4 Norms and Guidelines

Conform with Directive	2004/108/EG
CE Conformity	EN 61326-2-3:2007-05
Vibration test	EN60068-2-6, GL test 2
FDA-compliant	

1.5 Certification

EHDG Certificate No. 148/18.10.2007

2. Product Description

Magnetic flowmeters are used for dosing and measuring liquid, pulpy, or pasty fluids with electric conductivity. Due to the fast collection of measured data, precise results and short dosage times can be achieved.
Only FDA-compliant materials are used for those sensor areas touching the fluids.
Since the measurements are microprocessor-controlled, the operator is able to adjust the parameterization using the capacitive keys without having to open the device.

2.1 Scope of Delivery

- Mag Flowmeter MFI447
- Process adapter according to purchase order
- This operating manual
- Additional Documents, if necessary

2.2 Functional Principle

A magnetic Flowmeter (Fig. 1) principally consists of a measuring tube, a magnetic circuit, and two electrodes. The fluid flows through the measuring tube with minimal electric conductivity. Using spools, a magnetic field “B,” which is oriented perpendicularly to the flow direction, is applied from the outside. In the fluid, voltage “U_E” is induced and gripped via the two opposite electrodes. This occurs proportionally to the flow rate “V” of the measuring fluid. Knowing the tube diameter “D,” the measurement-amplifying electronics “V” calculates the current flow volume “Q.” The data for the outputs and the integrated volume counter are derived from this value.

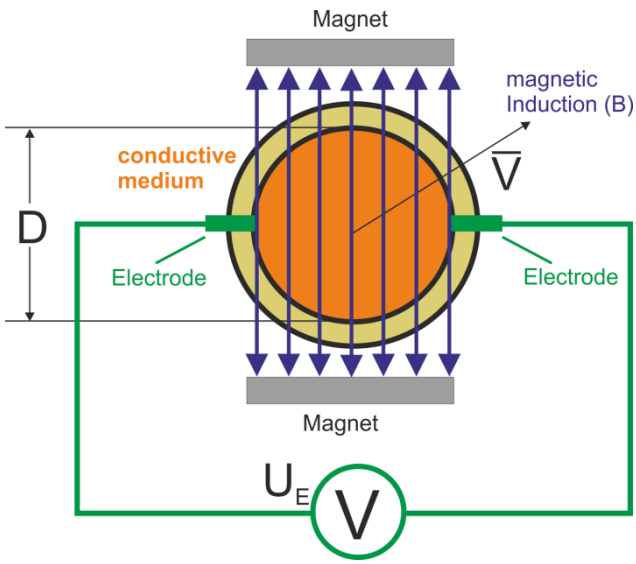

Figure 1

$U_E = B \times D \times \bar{v}$
$Q = \bar{v} \times A$

U_E: induced voltage
B: magnetic induction
D: tube diameter
$\bar{v}$: average flow rate
Q: volume flow
A: tube cross sectional area

2.3 Temperature Curve

Note:

In order to ensure the flawless functionality of the flowmeter, it must be kept in mind that the maximum acceptable process temperature (see Fig. 2) is dependent on the ambient temperature and may not be exceeded.

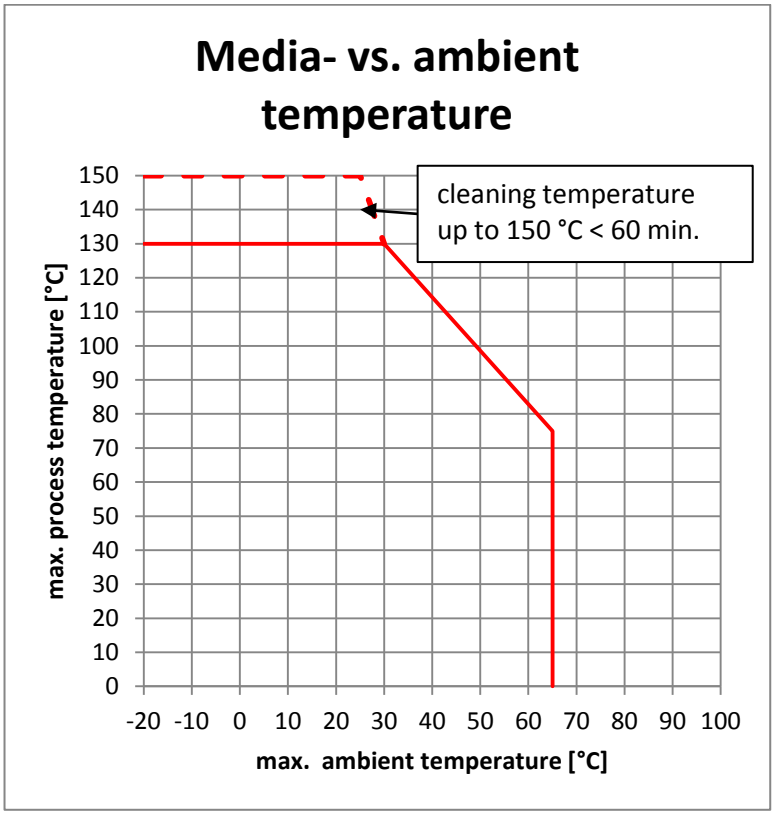

Figure 2

2.4 Measuring System Setup

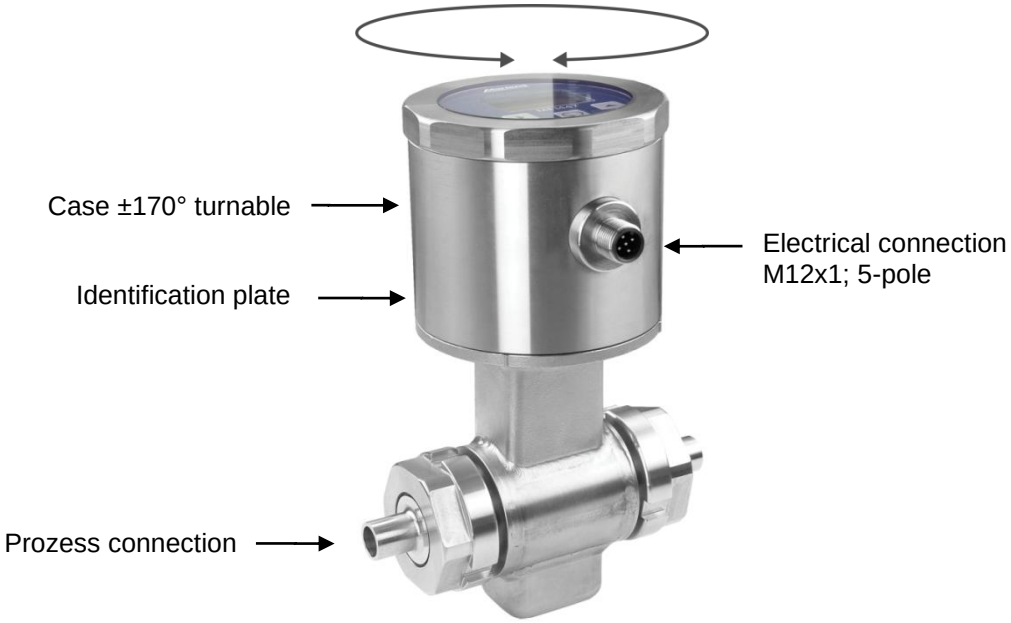

Figure 3

Block Diagram

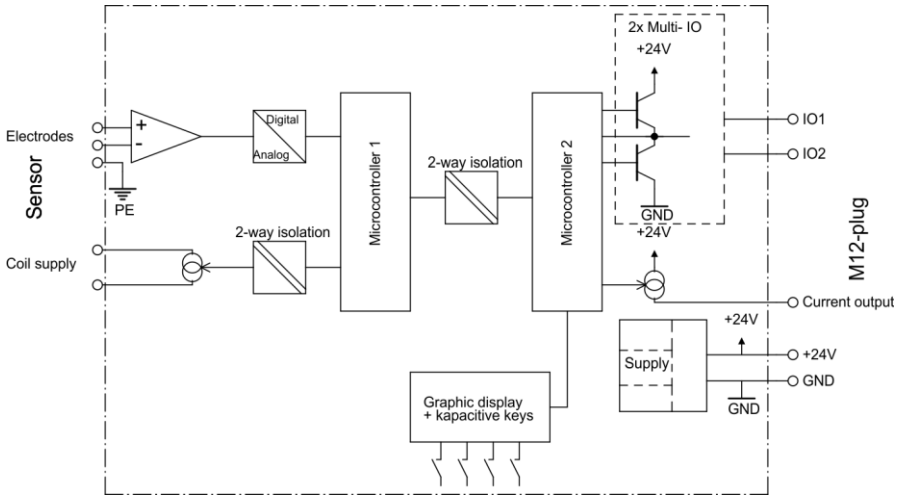

Figure 4

2.5 Identification Plate

The identification plate (Fig. 5) contains the most important identification data.

- Type and Device Designation
- Technical Specifications
- Serial Number

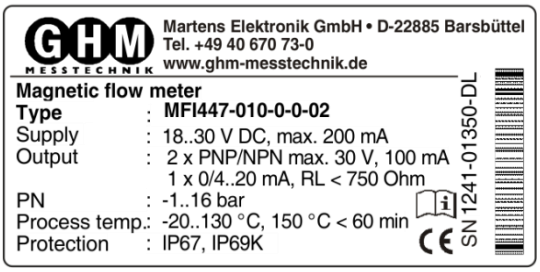

Figure 5

3. Mounting and Installation

3.1 Mechanical Mounting

Please observe the following notes:

- The measuring tube must be completely filled at all times.The sensor area must not contain air bubbles
- The flow-direction marking on the sensor must be the same as in the tube.
- During installation, no mechanical forces (torsion, bending) should be exerted on the process adaptation of the measuring device.
- The gaskets may not extend into the tube diameter since this will affect the accuracy of the measurement of the device.
- The measuring converter must not be exposed to solar radiation.

Inlet and Outlet Paths
A straight and undisturbed path of ≥ 3…5 x DN on the inlet side and ≥ 2 x DN on the outlet side must be observed in order to avoid measuring errors.
Valves and other actuators should be mounted after the MFI447 and behind the outlet path.

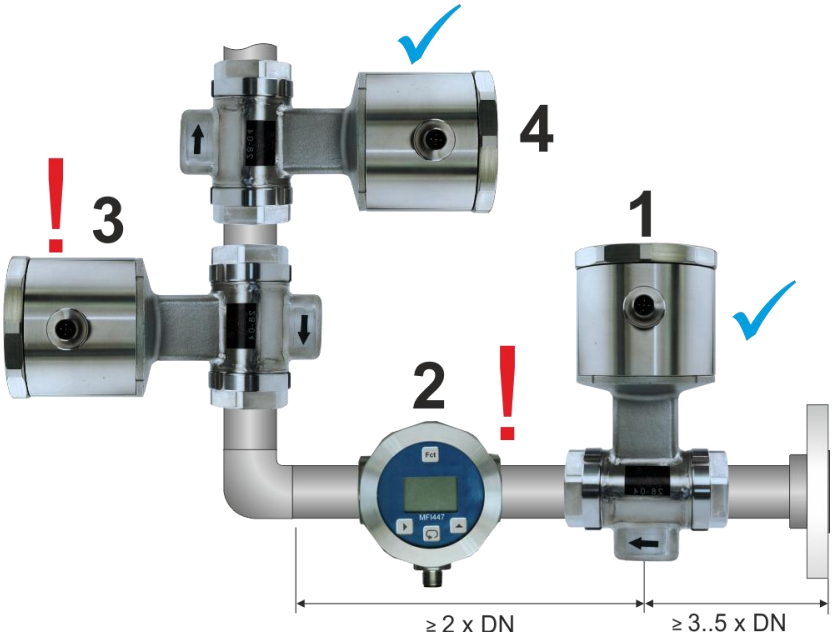

Figure 6

Position	Characteristics
1	*Ideal:* Good measuring result, if no air bubbles form. Minimum distance to tube angle 3….5 x DN in the inlet and 2 x DN in the outlet.
	Not recommended: The configuration of measuring electrodes may lead to measuring errors (when air is trapped), making it impossible to ensure flawless functionality.
3	*Questionable (only free outlet):* A falling flow direction may lead to measuring errors.
4	*Ideal:* Good measuring result, if no air bubbles form. Minimum distance to tube angle same as 1.

Table 2

3.1.1 Installation Position

Electrode Axis, Horizontal Installation Position
The electrode axis should be horizontal. If this is not possible, the electrode axis should not touch the highest point of the tubing (installation 12:00 o'clock) and is set to 2:00 o'clock.

Free Outlet Path, Down Tube
In order to avoid trapped gas and air, don't install the Flow meter at the highest point (risk of trapped air), immediately before a free outlet, or in a down tube. A siphon or a venting valve must be installed in down tubes whose distance to the upper point of the measuring tube is > 5 m (approx. 16 ft.) This avoids an interruption of the liquid stream and subsequent trapped air.

Installation Near Pumps
In order to avoid underpressure and damage to the inner tube coating, don't install the device on the suction side of a pump. In order to avoid the transfer of vibrations onto the Flow meter, it is recommended to use pulsation dampers or vibration compensators. This will help compensate pulsations that occur during pumping.

Vertical Installation
In vertical installations, the Flow meter is ideally installed in a rising tube. This is the only way to ensure that the measuring tube is always completely filled, and gas bubbles can escape.

Partially Filled Tubing
For partially filled tubes, a design including a device similar to an inverse siphon is necessary. In order to avoid disturbing accumulations of solid matter, the Flow meter must not be installed at the lowest point of the inverse siphon.

Increase of Flow Rate, Installation in Tubing with Larger Nominal Diameters
The Flow meter may also be installed in tubing with larger nominal diameters if suitable adapters are used. This permits higher flow rates and increased measuring accuracy. When using reducing adapters, the loss of pressure can be determined as follows:

1. Determine the pressure measurement ratio d/D (d = Nominal diameter of measuring device, D = Interior tubing diameter.
2. Determine the flow rate from the flow diagram.
3. Read the pressure loss on the y-axis in the diagram.

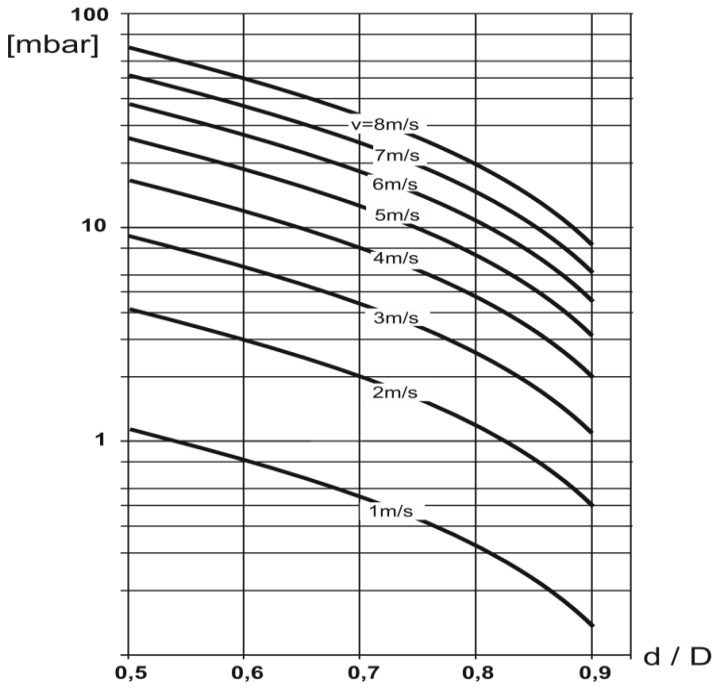

Figure 7

3.1.2 Flowmeter Layout Notes

Abrasive fluids consist of a mixture of water and suspended particles of different grain sizes, such as clay, cement, concrete, etc., which, according to their processing, may have very sharp edges. Depending on the flow rate, this may lead to an erosion of the inner tube coating and a significant reduction of product life.

In order to avoid this, the following point with regard to abrasive fluids must be observed for the use of the MFI447:

- Discuss the use of the device with the manufacturer as early as possible during the planning stage.
- If suitable, choose the slowest possible flow rate (< 1 m/s). This can also be achieved by selecting a larger measuring feeder.
- Ideally, the installation should include a vertical rising tube.

Fluids with Strong Adhesion
Deposits and adhesions may be avoided by a sufficiently high flow rate. The flow rate may be increased by using a smaller measuring feeder.

Film-Forming, Fatty Fluids
For these kinds of fluids (e.g. cream), tip electrodes (special design) are preferable. Due to their construction, these electrodes are self-cleaning, which avoids an isolation of the electrodes and, therefore, an adverse effect on the measuring signal.

Vacuum Resistance
Due to its high-grade, vacuum-resistant, smooth PFA inner coating, the Flow meter keeps its shape and satisfies highest requirements. It is resistant to rapid temperature fluctuations (hot-cold alternations during CIP process) or to vacuum suction, which may arise from emptying tubing.

Dimensions
When the flow rate is too low, the tubing must be reduced to a suitable diameter. For nominal tubing diameters < DN10, the measuring tube of the Flow meter is reduced from DN10 in the inlet and outlet to the respective smaller diameter.

Conversion table l/min ⇔ m/s

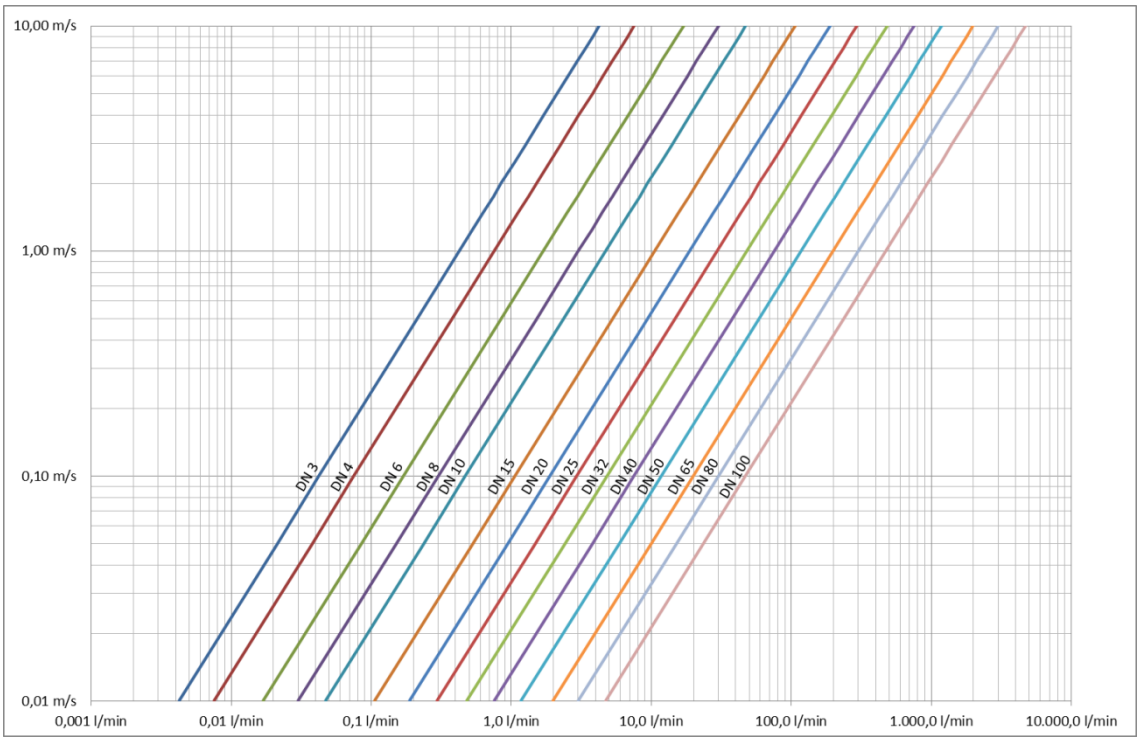

Figure 8

3.1.3 Welding Notes

Welding in Tubing
If welding nipples are used, they must be welded to the tubing uninstalled and without gaskets installed (orbital welding). It is vital to remember that the cap nuts of the Flow meter are placed on the left and the right on the tubing before welding.

The housing of the MFI447 must not be used for welding!

The weld-nipple gaskets must be removed before welding!

3.1.4 Notes for EHEDG-Compliant Installation

In EHEDG-compliant installations, the process connection assembled by the system operator must consist of EHEDG-compliant materials only.

3.2 Notes for Regulation (EG) 1935/2004

The following product components are configured for long-term contact with food items, in conformity with Regulation (EG) 1935/2004.

- Inner PFA coating, FDA-compliant
- Electrodes 1.4539
- Tube connection 1.4435
- Gasket EPDM (FDA-compliant)

3.3 Electrical Installation

Danger

The device must be installed by authorized skilled personnel. The national and international regulations of the respective operating country for assembling electrical systems apply.

The voltage according to EN60664-1 SELV, PELV is supplied at the connectors 1 (+ 24 VDC) and 3 (- GND). Connectors 2 (switching output 2) and 4 (switching output 1) are reserved for non-contact switching outputs. The maximum load current of these outputs is 100 mA at max. 30 VDC. These outputs may be programmed as NPN, PNP or push-pull outputs.
Connector 5 is available as an analog output, 0/4…20 mA.

Switching outputs PNP function (Push)

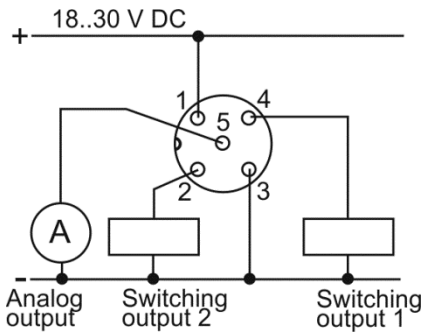

Figure 9

Switching outputs NPN Function (Pull)

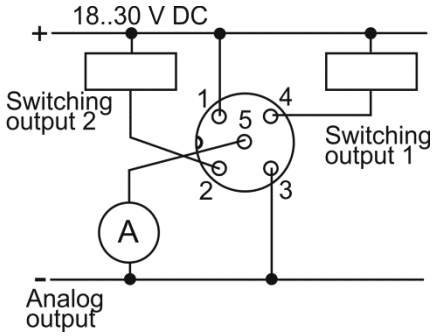

Figure 10

Cable colours: 1=brown, 2=white, 3=blue, 4=black, 5=grey

4. LC Display, Controls and Control Functions

4.1 Controls

A total of four capacitive keys are available. The functions of the respective keys depends on the MFI447 operating state.

NOTE: Capacitive keys react to a change of capacity caused by an approaching finger. They have no moving parts and are therefore rugged. However, gloves, contamination and humidity may lead to malfunctions.

		MFI447 Operational State			
Key	**In Text**	**Measuring Operation**	**1. Menu Level**	**2. Menu Level**	**Edit Level**
▶	Right	Code input	Entering 2. Menu Level	Entering Edit Level	*For Selection Lists:* Return to second menu level without data implementation *For Numeric Input:* Move cursor one place to the right
▲	High	Code input	Move to next menu item	Move to next menu item	*For Selection Lists:* Next possible selection *For Numeric Input:* Alter a number or unit
↵	Enter	Code input	Move to menu item “0.1 Data store”	Move to 1. Menu Level	Move to second menu level with data implementation
Fct	Fct	Perform special function	No function	No function	No function

Table 3

4.2 Measuring mode

4.2.1 Display During Measuring Operation and Error messages

During measuring operations, the LC display shows measured values and status information. The displayed values change according to parameterization and device state.
The display is generally partitioned as followed:

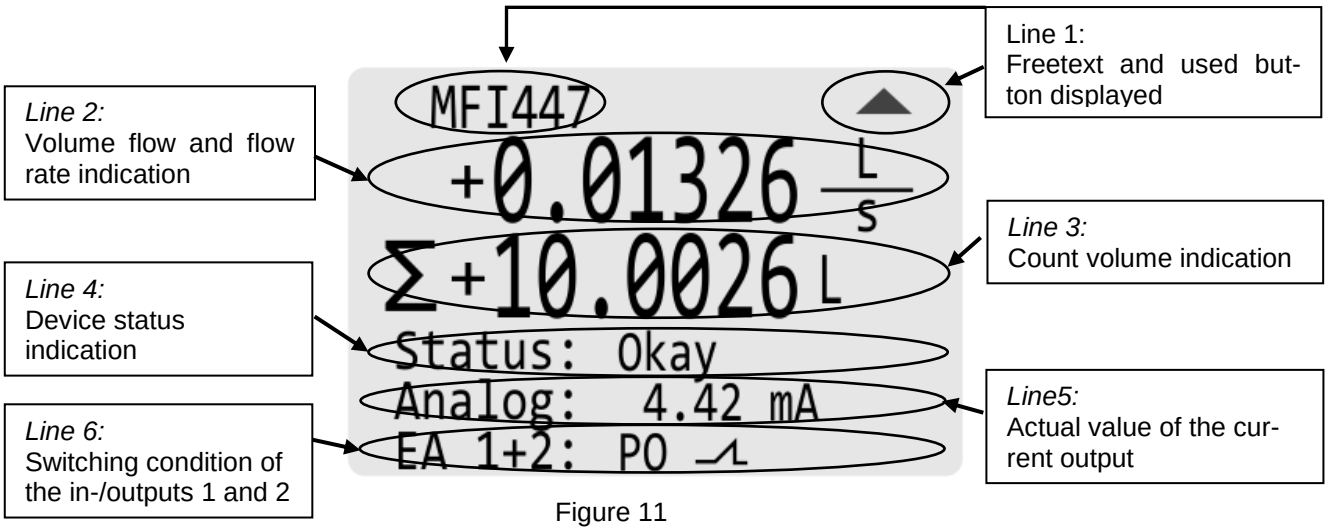

Figure 11

Row	Description	Details
1	Display of the tag text and pictogram for the key pressed	Value from Function 1.1 see Chapter 4.1
2	Volume flow and/or flow rate with signed unit	Units for volume flow: **cm³/s**, **cm³/min**, **cm³/h**, **l/s**, **l/min**, **l/h**, **hl/s**, **hl/min**, **hl/h**, **m³/s**, **m³/min**, **m³/h**, **gal/min**, **%** Units for flow rate: **cm/s**, **cm/min**, **m/s**, **m/min**, **ft/s**, **ft/min**
3	Volume counter with identifier and signed unit	Identifiers: **P** = Counter value for positive flow direction **N** = Counter value for negative flow direction ∑ = Sum of **P** and **N** **S** = Target quantity in batch operation **I** = filled volume (actual volume) in batch operation **R** = Trailing volume (rest volume) in batch operation
4	Current device state and error messages	Texts and meaning **Okay** = Device operates according to parameterization **Cal. Data** = Calibration data of the device not in valid range (fatal error) **Para 1** = Operation-parameter set failure in EEPROM (fatal error) **Para 2** = Operation-parameter set failure in EEPROM (fatal error) **Para 3** = Operation-parameter set failure in EEPROM (fatal error) **Para 4** = Operation-parameter set failure in EEPROM (fatal error) **Data** = Error in one parameter (fatal error) **Counter** = one or more volume counters lose data (fatal error) **Device** = Fatal error; the device is no longer functioning **Pulse** = Pulse output is above the limit (warning) **I-O Error** = Short circuit of one of the both switching outputs (warning) **Current** = Current output is above the limit (warning) **Filling** = Batch processing is active
5	Level control of power output level	The current value of the power output is shown in “mA.”
6	Switching status of output/input 1 and 2	Explanation of pictograms: **PO** Output is in pulse output mode **AI** Output is in analog input mode = Input or output not active = Input or output active

Table 4

1) Manufacturer’s setting or customized data set
2) Maximum fixed values. Data set is activated by error **Para 1**

4.2.2 Function key

The Function key can be assigned to the functions **Off, Counter Reset, Error Reset** and **Batch Start** (see parameter 1.4, page 14).

Counter Reset with key Fct

```
Edit
1.3 Counter Reset

don´t clear
Selection 1 of 2

Counter clear
```

Selection with key ▲ (Delete counter/don´t clear)
Implementation with the ↵ key or
cancellation with ▶ and return to the Measuring mode.

Error Reset with key Fct

Batch Start with key Fct (no filling process active)

```
 Edit
6.2 Batch volume

     002.00L

Volume
```

Edit Batch volume with keys ▲ and ▶
Batch Start with key ↵

Batch Abort with key Fct (filling process active)

(Filling process continues while the operating)

```
 Edit
 Stop Batch function

Batch stop
Selection 2 of 2

!!! BREAK !!!
```

Selection with key ▲ (Batch stop / Batch continue)
Implementation with the ↵ key or
cancellation with ▶ and return to the Measuring mode.

4.3 Parameterization

4.3.1 Entering Parameterization Mode

To enter the parameter mode, the keys must be pressed in the following sequence:

4.3.2 Control Structure

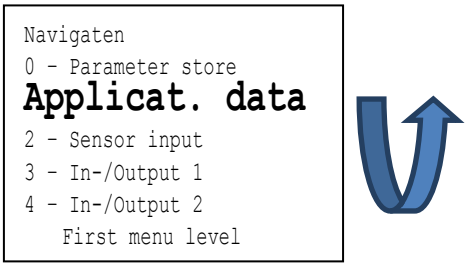

The parameter menu consists of three levels. The **first menu level** is functionally structured; e.g. the parameterization of a signal output or sensor input. The function is selected with the cycling key ▲. When selecting the function, the preceding number is hidden to save space, and the text is displayed in a larger font. When going into the **second menu level** with the ▶ key at a menu item, the possible parameters for the function are listed by name. Pressing the ▶ key again, changes the mode from Navigate to Edit. Depending on the selected parameter, a number may be entered or a selection may be made. The ↺ key implements data changes and returns to the second menu level. The ↺ key is also used to move to the first menu level. Moving from parameterization to measuring can only be done via the menu item “0.1 Data store.”

Example:

Measuring Operation

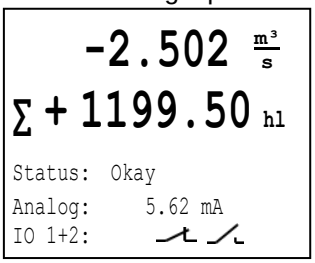

Key code input to change the parameterization

1. menu level

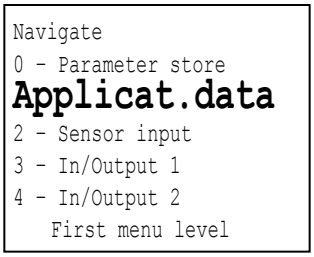

2. menu level

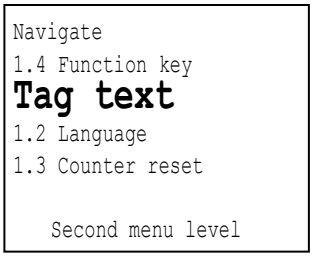

Edit level

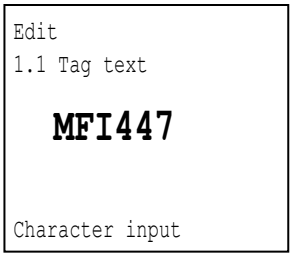

Continued on next page

After data input the key ends the edit level and returns to the second menu level.

Edit level

```
Edit
1.1 Tag text

   MFI447


Character input
```

2. menu level

```
Navigate
1.4 Function key
Tag text
1.2 Language
1.3 Counter reset

   Second menu level
```

1. menu level

```
Navigate
0 - Parameter store
Applicat.data
2 - Sensor input
3 - In-/Output 1
4 - In-/Output 2
   First menu level
```

When the edit is completed, the function “0 – Save” moves to the measuring display on the first menu level.

1. menu level

```
Navigate
9 - Informationen
Paramet. store
1 - Application data
2 - Sensor input
3 - In-/Output 1
   First menu level
```

2. menu Level

```
Navigate
0.2 Data read
Data store


   Second menu level
```

Edit Level

```
Edit
0.1 Data store

  Current data


Data store
```

```
   -2.502 m³/s
∑ +1199.50 hl
Status:  Okay
Analog:     5.62 mA
IO 1+2:
```

During parameterization, the measuring operation continues to run normally based on the previous parameters. The signal outputs and electronic counters are not affected by the parameterization. When the data have been released for storage by the user, a short interruption (of approx. 2 sec.) of the measuring operation occurs in order to reinitialize the device.

During reinitialization, the signal outputs may change to unexpected states for a short period.

Edit Level

Edit selection

Select language (example).
Implementation of selection and return to the second menu level.
Discard changes and return to the second menu level.

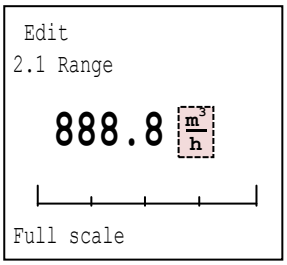

Edit numeric values

The place to be changed will be highlighted on the edit level. Depending on the selected unit, the decimal point is automatically placed for the value.

Change dimension

Different units may be selected. An automatic conversion of the numeric value to the new unit is performed immediately.

Selection of first digit… 4. digit (example)

Change of the individual place.

When the key is pressed during numeric input or dimension selection, the inputs are implemented, and the second menu level is accessed.

If the last digit is being edited and the key is pressed, the message **!!CANCEL??** is displayed. When the key is pressed, the changes are discarded, and the second menu level is accessed.

The cursor in the bar chart graphically shows the entered value with respect to the valid input range.

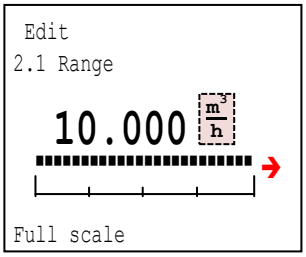

Selected value greater than the maximum device measuring range (overflow).

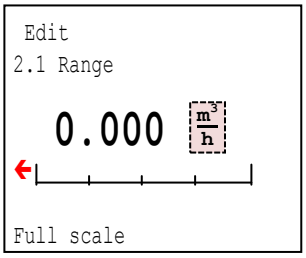

Selected value smaller than the minimum device measuring range (underflow).

Numeric values outside the valid range are not implemented. In these cases, the smallest and greatest valid values are displayed.

4.3.3 Parameter List

MFI447 Control Structure

1. Menu Level	2. Menu Level Parameter	Edit Level Selection/Input	Dimension
0 - Storage	0.1 Save data	Active data 2. Data set Do not save	
	0.2 Read data	Active data 2. Data set Supply set Default set	
1 - Application data	1.1 Tag text	Free text input	Up to 20 ASCII characters
	1.2 Language	German English	
	1.3 Counter reset	No reset Reset Counter	
	1.4 Function key	Off Counter reset Error reset Batch start	
2 - Sensor input	2.1 Range	Unit/numeric Value	cm³/s, cm³/min, cm³/h, l/s, l/min, l/h, hl/s, hl/min, hl/h, m³/s, m³/min, m³/h, gal/min
	2.2 Time Constant	Numeric Value	s
	2.3 Leak Flow Volume	Numeric Value	in % of Measuring Range
	2.4 Dfl. Direction	Forward Reverse	
	2.5 Zero Point	Zero Point Calibration	
3 - Input/Output 1	3.1 I/O Function	Off Switching Output Pulse Output Control Input Analog Input	
	If switching output was selected		
	3.2 Hardware Config	PNP (Push) PNP Inverted NPN (Pull) NPN Inverted Push / Pull Push / Pull Inverted	
	3.3 Switching Function	Off On Error Message Warnings Flow Direction Filling Output Switching Point	
	If switching point was selected		
	3.4 Switching Point On	Unit/num. value	Unit same as 2.1 Measuring Range
	3.5 Switching Point Off	Unit/num. value	Unit same as 2.1 Measuring Range
	If pulse output was selected		
	3.2 Hardware Config.	PNP (Push) PNP Inverted NPN (Pull) NPN Inverted Push /Pull P/P Inverted	
	3.3 Output derection	+ Flow - Flow +/- Flow	
	3.4 Pulse Value	Unit/num. value	
	3.5 Pulse Width	Automatic 1 ms Pulse 5 ms Pulse 10 ms Pulse 25 ms Pulse 50 ms Pulse	
	If control input was selected		
	3.2 Hardware Config.	In>4V Out<2V In>8V Out<3V In>18V Out<6V	
	3.3 Control Function	Outputs 0% Outputs stop Counter reset Error reset	

1. Menu Level	2. Menu Level Parameter	Edit Level Selection/Input	Dimension
		Batch start	
	If analog input was selected		
	3.2 Scale 1	Unit/num. value	Unit same as 6.2 Target Volume
	3.3 Scale 2	Unit/num. value	Unit same as 6.2 Target Volume
4 - Input/Output 2	4.1 I/O Function	Off Switching Output Pulse Output Control Input Analog Input	
	If switching output was selected		
	4.2 Hardware Config.	PNP (Push) PNP Inverted NPN (Pull) NPN Inverted Push / Pull Push / Pull Inverted	
	4.3 Switching Function	Off On Error Message Warnings Flow Direction Filling Output Switching Point	
	If switching point was selected		
	4.4 Switching Value On	Unit/num. value	Unit same as 2.1 Measuring Range
	4.5 Switching Value Off	Unit/num. value	Unit same as 2.1 Measuring Range
	If pulse output was selected		
	4.2 Hardware Config.	PNP (Push) PNP Inverted NPN (Pull) NPN Inverted Push / Pull Push / Pull Inverted	
	4.3 Output direction	+ Flow - Flow +/- Flow	
	4.4 Pulse Value	Unit/numeric value	
	4.5 Pulse Width	Automatic 1 ms Pulse 5 ms Pulse 10 ms Pulse 25 ms Pulse 50 ms Pulse	
	If control input was selected		
	4.2 Hardware Config.	In>4 V Out<2 V In>8 V Out<3 V In>18 V Out<6 V	
	4.3 Control Function	Outputs 0 % Outputs stop Counter reset Error reset Batch start	
	If analog input was selected		
	4.2 Scale 1	Unit/numeric value	Unit same as 6.2 Target Volume
	4.3 Scale 2	Unit/numeric value	Unit same as 6.2 Target Volume
5 - Analog Output	5.1 Function	Off + Flow - Flow +/- Flow +/- Linear	
	5.2 Range	0 .. 20 mA 0 .. 20/22 mA 4 .. 20 mA 4 .. 20/22 mA 3.6/4 .. 20 mA	
6 - Filling Function	6.1 Filling Function	Off Normal Tail volume	
	6.2 Target Volume	Unit/num. value	cm³, l, hl, m³,gal
7- LC Display	7.1 Flow Display	Off, cm³/s, cm³/min, cm³/h, l/s, l/min, l/h, hl/s, hl/min, hl/h, m³/s, m³/min, m³/h, gal/min, percent	
	7.2 Flow Rate	Off, cm/s, cm/min, m/s, m/min, ft/s, ft/min	
	7.3 Positive Counter	Off, cm³, l, hl, m³, gal	
	7.4 Negative Counter	Off, cm³, l, hl, m³, gal	

1. Menu Level	2. Menu Level Parameter	Edit Level Selection/Input	Dimension
	7.5 Sum Counter	Off, cm³, l, hl, m³, gal	
	7.6 Status Display	Off Warnings Error	
	7.7 Display Change	3 seconds 5 seconds 10 seconds	
	7.8 LCD Contrast	10 %, 20 %, 30 %, 40 %, 50 %, 60 %, 70 %, 80 %, 90 %, 100 %	
	7.9 LCD Brightness	10 %, 20 %, 30 %, 40 %, 50 %, 60 %, 70 %, 80 %, 90 %, 100 %	
8 - Test Functions	8.1 Input/Output 1	Out, In	
	8.2 Input/Output 2	Out, In	
	8.3 Analog Output	0 mA, 3.6 mA, 4 mA, 10 mA, 16 mA, 20 mA, 22 mA	
9 - Information	9.1 ADW Version	Text Display	
	9.2 IO Version	Text Display	
	9.3 Nominal Diameter	Text Display	
	9.4 Field Frequency	Text Display	
	9.5 Line Frequency	Text Display	
	9.6 Calibration Value	Text Display	
	9.7 Operating Hours	Text Display	

Table 5

4.3.4 Parameter Description

For "1 – Application Data":

```
Navigate
0 - Parameter store
Applicat.data
2 - Sensor input
3 - In-/Output 1
4 - In-/Output 2
   First menu level
```

The "1 – Application data" function determines, for example, the control language, the function of the function key, etc.

```
Navigate
1.4 Function key
Tag text
1.2 Language
1.3 Counter reset

   Second menu level
```

```
Edit
1.1 Tag text

   MFI447

Character input
```

A free text of 10 characters maximum may be entered at this point. It is displayed during measuring mode in the row in the upper left.
The text is entered with the ▲ and ▶ keys.
Implementation with the ↩ key and return to the second menu level.

```
Navigate
1.1 Tag text
Language
1.3 Counter reset
1.4 Function key

   Second menu level
```

```
Edit
1.2 Language

   German
Selection 1 von 2

Language selection
```

Selection **German** or **English**.
Additional languages under preparation.

The language is changed immediately after pressing the ↩ key and returning to the second menu level.

Continued on next page

```
Navigate
1.2 Language
Counter reset
1.4 Function key
1.1 Tag text

   Second menu level
```

```
Edit
1.3 Counter reset

don´t clear
Selection 1 of 2

Counter clear
```

In order to delete the two internal counters, "**Delete Counter** "must be selected from this menu item. After pressing the key, the counters are immediately and permanently deleted. Implementation with the key or cancellation with and return to the second menu level.

```
Navigate
1.3 Counter Reset
Function key
1.1 Tag text
1.2 Language

   Second menu level
```

For "1.1" For "1"

```
Edit
1.4 Function

Off
Selection 1 of 4

Function of the key
```

The function key can be assigned the functions
Off
Counter reset
Error reset
Batch start
Implementation with the key or cancellation with and return to the second menu level.

For "2 - Sensor Input":

```
Navigate
1 - Application data
Sensor input
3 - In-/Output 1
4 - In-/Output 2
5 - Analog output
   First menu level
```

The "2 – Sensor input" function edits all data regarding the sensor. Since all other device components obtain their data from the calculated sensor input, changes to these parameters have far-reaching consequences. These include current and pulse output, display, etc.

```
Navigate
2.5 Zero point
Range
2.2 Time constant
2.3 Leak flow volume
2.4 Flow direction
   Second menu level
```

```
Edit
2.1 Range
10.000 m³/h

Full scale
```

The measuring range on the one hand controls the power output level and, on the other, serves as the basis for the percentages, such as the leak flow volume. The input format of the digits preceding and following the decimal point is automatically determined, depending on the dimension and nominal diameter. When a dimension is changed, the value is immediately converted. The bar chart under the number shows whether the value is within the acceptable limits.
Implementation with the key and return to the second menu level.

Continued on next page

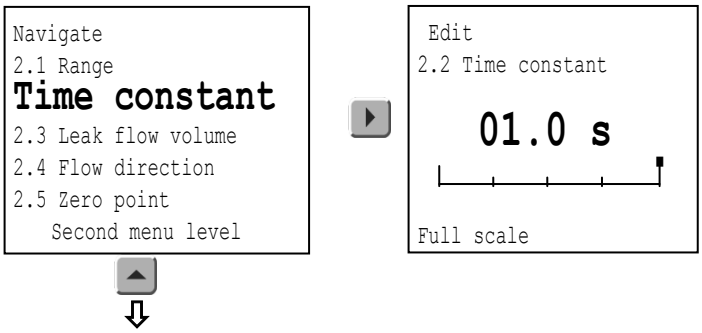

The time constant is a function that levels the measured value. High time constants are useful for erratic measured values (e.g. low conductivity or pulsating flow). A sudden flow increase from 0 % to 100 % results in a measured value of approx. 63 %, when the time constant is set. After a fivefold time lapse, the measured value will be within 1% of the value.
The value range is from **0.2** to **15.0** sec.
Implementation with the key and return to the second menu level.

4.3.5 Example for Parameter Description: 2.3 Time constant

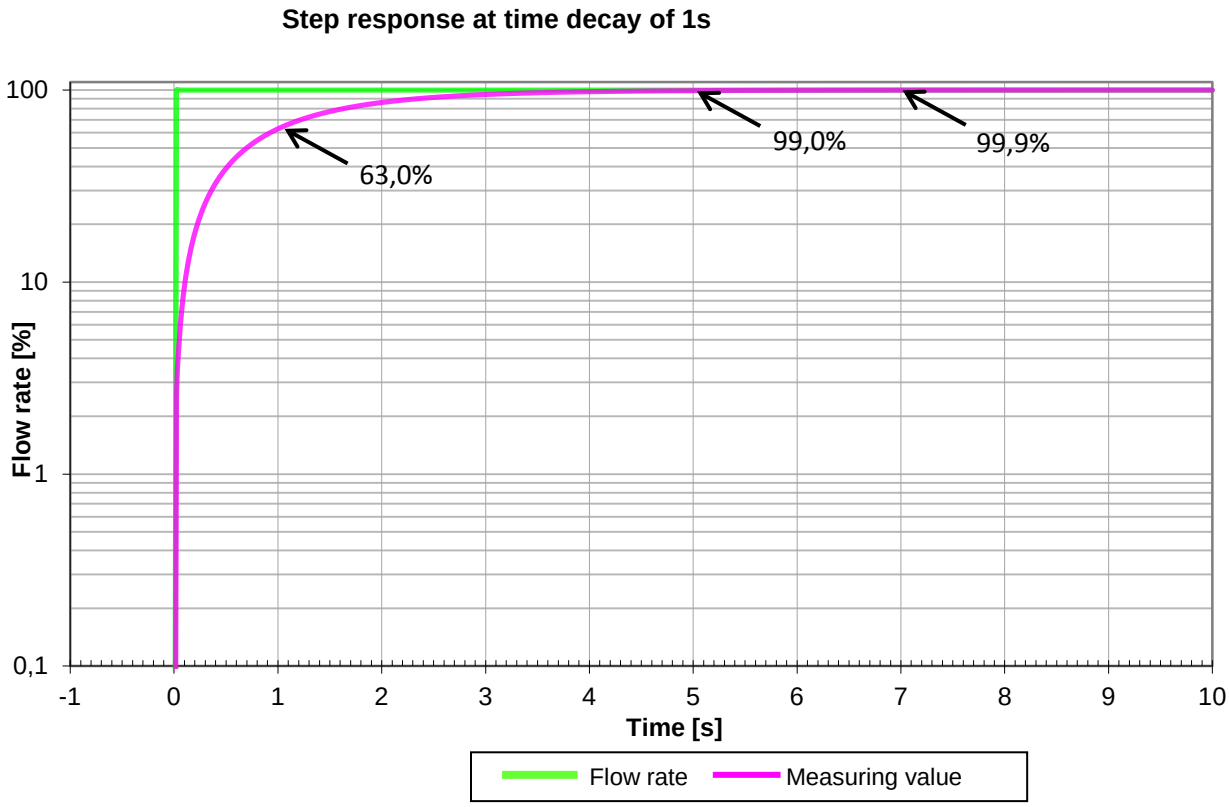

Figure 13

Contunued on next page

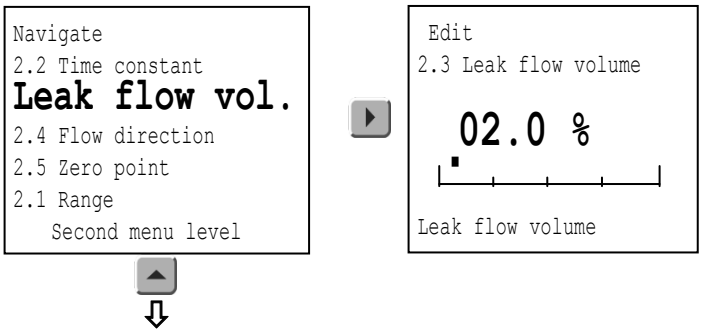

The leak-flow-volume suppression helps level the measured value near point zero. If the measured value is below the switching point, the measured value will be set to zero. This applies to all outputs and the display.
The value range is from **0.1** to **15.0 %**.
Implementation with the key and return to the second menu level.

4.3.6 Example for Parameter Description: 2.3 Leak flow volume

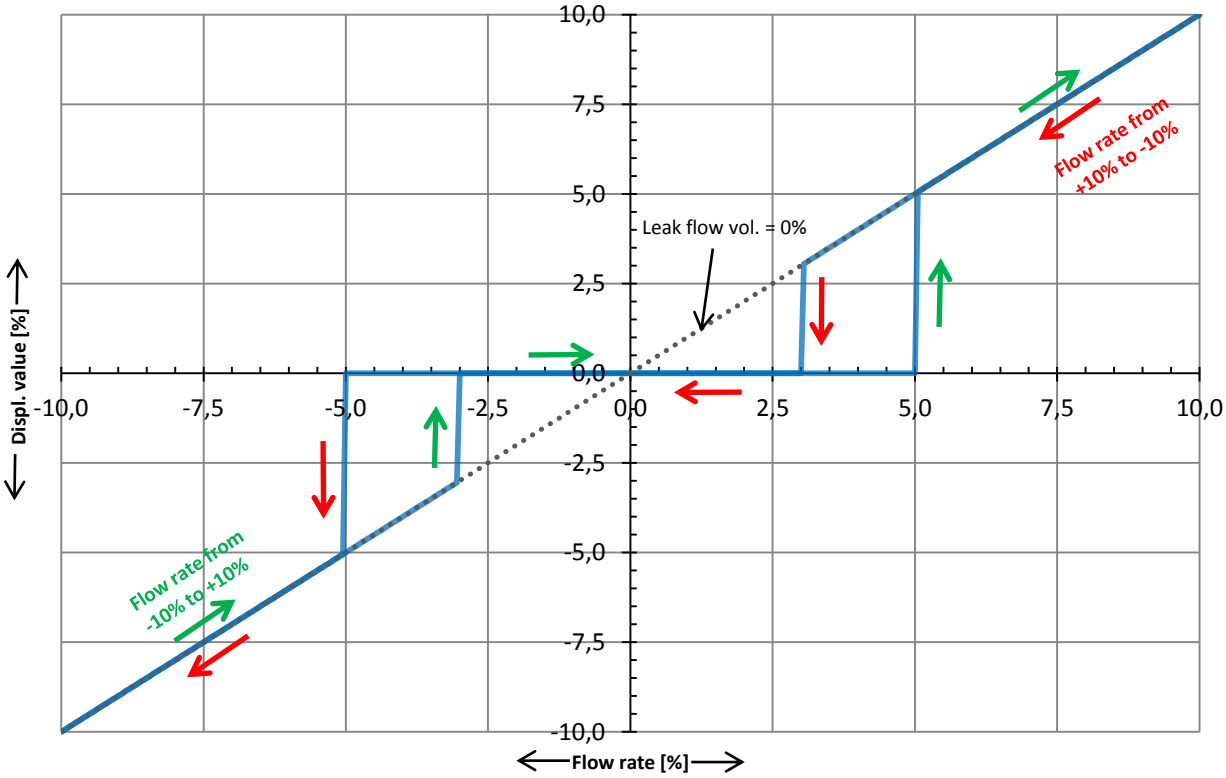

Figure 14

Continued on next page

```
Navigate
2.3 Leak flow volume
Flow direction
2.5 Zero point
2.1 Range
2.2 Time constant
   Second menu level
```

```
Edit
2.4 Flow direction

Forward
Selection 1 of 2

See arrow
```

If the sensor was installed in reverse (turned by 180°), or an installation in the default direction is not possible, this function can virtually turn the sensor. In this case, all directional information is inverted with respect to the arrow on the sensor.
Selection:
Forward
Reverse
Implementation with the key or cancellation with and return to the second menu level.

```
Navigate
2.4 Flow direction
Zero point
2.1 Range
2.2 Time constant
2.3 Leak flow volume
   Second menu level
```

For “2.1” For “2”

```
Edit
2.5 Zero point

Don´t calib.
Selection 1 of 2

Zeropoint cal.
```

Prior to delivery, point zero is calibrated for each MFI447 by the manufacturer. Still, a point-zero calibration can be useful for some applications. For this purpose, the liquid in the sensor must be absolutely still and free from air bubbles.The point-zero measuring progression is shown by the position of the bar chart on the display. Finally, the zero-point value is shown in the display followed by the prompt to save or discard the value.
Selection:
Don´t calib
Start calib
Implementation with the key or cancellation with and return to the second menu level.

For "3 – Input/Output1”:

```
Navigate
2 - Sensor input
In-/Output1
4 - In-/Output 2
5 - Analog output
6 - Filling funtion
   First menu level
```

The function “3 – Input/Output” determines the function of Pin 4 of the M12 connector. The multifunctional input/output may be programmed as a switching output for various MFI447 states, as a scalable pulse output, as an input for controlling internal processes, or as an analog input for target value settings.

```
Navigate
3.3 Switch funtion
I/O Function
3.2 Hardware config.

   Second menu level
```

```
Edit
3.1 I/O Function

 Off
Selection 1 of 5

In-/Output Fct.
```

The use of the input or output is determined in the first step. **Depending on the selection, the following menu changes**:
Selection:
Off
Switching output
Pulse output
Control input
Analog input
Implementation with the key or cancellation with and return to the second menu level.

If “Off” was selected for “3.1 I/O Function”:

No further menu items are available. The output is not edited.

Continued on next page

If “Switching output” was selected for “3.1 I/O Function”:

```
Navigate
3.1 I/O Function
Hardware conf.
3.3 Switch function
3.4 Switch on point
3.5 Switch off point
   Second menu level
```

```
Edit
3.2 Hardware conf.

 PNP (push)
Selection 1 of 6

Output driver
```

Hardware Configuration selects the driver level for the output.
Selection:
PNP (push)
PNP inverted
NPN (pull)
NPN inverted
Push / Pull
P/P inverted
Implementation with the key or cancellation with and return to the second menu level.

```
Navigate
3.2 Hardware conf.
Switch func.
3.4 Switch on point
3.5 Switch off point
3.1 I/O Function
   Second menu level
```

Continue with
“3.4 Switch on point”
for selection "Switch Value
otherwise continue with
“3.1 I/O Function”

```
Edit
3.3 Switch function

 Switch value
Selection 6 of 7

Output function
```

A total of seven functions are available for the output.
Off
On
Error Message
Warning
Flow direction
Filling Output
Switching Point
In the Error Message mode, the output is switched through after the MFI447 has detected an error. Errors are states that can also be resolved by operator intervention. This includes e.g. invalid parameters. “Warnings” are similar to “Errors,” but they may occur during device operation and can disappear without intervention. Examples are pulse- or power-output values that are too high. “Flow Direction” indicates the flow direction of the liquid at the output. The output switches when the flow is opposite to the direction indicated. “Filling Output” is a special function and is described separately. As a further selection, a switching value may be applied to the present flow. In this case, two more menu items appear.
Implementation with the key or cancellation with and return to the second menu level.

If “Switching Point” was selected for “3.3 Switch Functions”:

```
Navigate
3.3 Switch function
Switch on p
3.5 Switch off point
3.1 I/O Function
3.2 Hardware conf.
   Second menu level
```

```
 Edit
3.4 Switch on point

0.1234  l/s

High flow switch pnt
```

The switch-on point may be entered as a signed input.
Unit and measuring range same as 2.1

Implementation with the key and return to the second menu level.

Continued on next page

```
Navigate
3.4 Switch on point
Switch off p
3.1 I/O Function
3.2 Hardware conf.
3.3 Switch function
   Second menu level
```

```
 Edit
3.5 Switch off point
1.2345  l/s
Low flow switch pnt.
```

The switch-off point may be entered as a signed input.
Unit and measuring range same as 2.1

Implementation with the key and return to the second menu level.

Continue with
"3.1 I/O Function"

If "Pulse output" was selected for "3.1 I/O Function":

```
Navigate
3.1 I/O Function
Hardware conf.
3.3 Output direct.
3.4 Pulse value
3.5 Pulse width
   Second menu level
```

```
Edit
3.2 Hardware conf.
PNP (Push)
Selection 1 of 6
Output driver
```

Hardware Configuration selects the driver level for the output.
Selection:
PNP (Push)
PNP Inverted
NPN (Pull)
NPN Inverted
Push /Pull
P/P inverted
Implementation with the key or cancellation with and return to the second menu level.

```
Navigate
3.2 Hardware conf.
Output direct.
3.4 Pulse value
3.5 Pulse width
3.1 I/O Function
   Second menu level
```

```
Edit
3.3 Output direct.
+Flow
Selection 1 of 3
Value polarity
```

The pulse output is defined via the menu item.
Selection:
+ Flow direct.
- Flow direct.
+/- Flow direct.
In the + Flow mode, pulses are only output when the flow direction corresponds with the arrow on the sensor (if the direction has not been turned around with function 2.4). The same is true for the - Flow mode, but in the opposite direction. In the +/- Flow mode, the pulses are output regardless of flow direction.
Implementation with the key or cancellation with and return to the second menu level.

```
Navigate
3.3 Output direct.
Pulse value
3.5 Pulse width
3.1 I/O Function
3.2 Hardware conf.
   Second menu level
```

```
Edit
3.4 Pulse value
99999.9  Puls/m³
Pulse value
```

This function sets the pulse value.

Implementation with the key and return to the second menu level.

Continued on next page

```
Navigate
3.4 Pulse value
Pulse width
3.1 I/O Function
3.2 Hardware conf.
3.3 Output direct.
   Second menu level
```

Continue with
"3.1 I/O Function"

```
Edit
3.5 Pulse width

  Automatic
Selection 1 of 6

Pulse width
```

The defined pulse width may be required for some applications (such as electromechanical counters).
Selection:
Automatic
1 ms Pulse
5 ms Pulse
10 ms Pulse
25 ms Pulse
50 ms Pulse
In other cases, the automatic calculation of the pulse width will produce the best results. If the pulse output rate is faster than acceptable for the pulse width, the warning "pulse" appears in the status field of the display.
Implementation with the key or cancellation with and return to the second menu level.

If "Control Input" was selected for "3.1 I/O Function":

```
Navivigation
3.1 I/O Function
Hardware conf.
3.3 Control funtion

   Second menu level
```

```
Edit
3.2 Hardware conf.

On>4V Off<2V
Selection 1 of 3

Switching level
```

This function defines the switch-on and switch-off threshold of the input.
Selection:
On>4V Off<2V
On>8V Off<3V
On>18V Off<6V
Implementation with the key or cancellation with and return to the second menu level.

```
Navigate
3.3 Hardware conf.
Control funct.
3.1 I/O Function

   Second menu level
```

Continue with
"3.1 I/O Function"

```
Edit
3.3 Control funct.

Outputs 0%
Selection 1 of 5

Input function
```

This is where the input function is determined.
Selection:
Outputs 0%
Outputs stop
Counter res.
Error reset
Batch start
Implementation with the key or cancellation with and return to the second menu level.

If „Analog input" was seleceted for „3.1 I/O function"

```
Navigation
3.0 I/O funktion
Scale input 0
3.3 Scale input 10V

   Second menu level
```

```
Edit
3.2 Scale input 0 V

  000.000 L

Volume at 0 V
```

The set value of a batch volume for 0 V setpoint will set with this function.

Implementation with the key or cancellation with and return to the second menu level.

Continued next page

```
Navigation
3.2 Scale input 0 V
Scale input 10
3.0 I/O function

Second menu level
```

```
Edit
3.3 Scale input 10V

000.000 L

Volume at 10 V
```

The set value of a batch volume for 10 V setpoint will set with this function.

Implementation with the key or cancellation with and return to the second menu level

Continue with
“3.1 I/O Function”

For "4 – Input/Output2”:

```
Navigate
3 - In-/Output1
In-/Output2
5 - Analog output
6 - Filling function
7 - LC-Display
First menu level
```

The function “4 – Input/Output2” determines the function of Pin 2 of the M12 connector. The multifunctional input/output has the same functionalities as Input/Output 1.

For "5 – Analog Output”:

```
Navigate
4 - In-/Output 2
Analog output
6 - Filling function
7 - LC-Display
8 - Test functionen
First menu level
```

The function “5 – Analog output” determines the functionality of the power output. The level range of the power output 0/4..20 mA is 0.0..terminal measuring-range value (Parameter “2.1 Measuring Range”)

```
Navigate
5.2 Range
Function

Second menu level
```

```
Edit
5.1 Function

Off
Selection 1 of 5

Value polarity
```

The current output is defined via the menu item.
Selection:
Off
+ Flow
- Flow
+/- Flow
+/- Linear
In the +Flow mode, the output only occurs when the flow direction corresponds with the arrow on the sensor (if the direction has not been turned around with function 2.4). The same is true for the - Flow mode, but in the opposite direction.In +/- Flow mode, the output occurs regardless of the flow direction (see Table 6, Page 29).
Implementation with the key or cancellation with and return to the second menu level.

Continued on next page

Function	-100 % Flow	0 % Flow	+100 % Flow
+ Flow	0/4 mA	0/4 mA	20 mA
- Flow	20 mA	0/4 mA	0/4 mA
+/- Flow	20 mA	0/4 mA	20 mA
+/- Linear	0/4 mA	10/12 mA	20 mA

Table 6

```
Navigate
5.1 Function
Range

Second menu level
```

```
Edit
5.2 Range

0..20 mA
Selection 1 of 5

Output range
```

This function defines the level range of the power output.
Selection:
0..20 mA
0..20/22 mA
4..20 mA
4..20/22 mA
3.6/4..20 mA
In case of overload or error, the value jumps to 3.6 or 22 mA if this function has been selected.

Implementation with the key or cancellation with and return to the second menu level.

Continue with
"5.1 Function"

For "6 - Filling Function":

```
Navigate
5 - Analog output
Filling funct.
7 - LC-Display
8 - Test functions
9 - Information
  First menu level
```

Function "6 – Filling Function" is a simple MFI447 control for adding and dosing liquid. For this purpose a target quantity may be determined, which, when reached, triggers a switching function for one of the two inputs/outputs. The process can be started either with the function key on the device or via the other input/output of MFI447.

```
Navigate
6.2 Batch volume
Batch function

Second menu level
```

```
Edit
6.1 Batch function

Off
Selection 1 of 3

Controlling
```

The following volume functions for the adding process may be selected:
Off
Normal
Tail volume

Implementation with the key or cancellation with and return to the second menu level.

```
Navigate
6.1 Batch funtion
Batch volume

Second menu level
```

```
Edit
6.2 Batch volume

1.2345 cm³

Volume
```

The switch-off point may be entered here.

Implementation with the key and return to the second menu level.

Continue with
"6.1 Filling Function"

Continued on next page

For “7 - LC Display”:

```
Navigate
6 - Filling function
LC-Display
8 - Test functions
9 - Informations
0 - Parameter store
First menu level
```

“7 – LC Display” displays the measuring results and the current state during normal MFI447 operation. The display is divided in areas as described in Chapter “4.2 Display During Measuring Mode.”

```
Navigate
7.8 LCD contrast
Volume flow
7.2 Flow rate
7.3 pos. counter
7.4 neg. counter
   Second menu level
```

```
Edit
7.1 Volume flow

 Off
Selection 1 off 9

Volume flow func.
```

The flow may be displayed in physical units or as a percentage with reference to the selected terminal measured value in the second row of the measuring display.
Selection:
Off; **cm³/s**; **cm³/min**; **cm³/h**; **l/s**; **l/min**; **l/h**; **hl/s**; **hl/min**; **hl/h**; **m³/s**; **m³/min**; **m³/h**; **gal/min**; **percent.**
The value is not displayed when “Off” has been selected.
Implementation with the key or cancellation with and return to the second menu level.

```
Navigate
7.1 Volume flow
Flow rate
7.3 pos. counter
7.4 neg. counter
7.5 Sum counter
   Second menu level
```

```
Edit
7.2 Flow rate

 Off
Selection 1 of 7

Flow rate func.
```

The flow rate may be displayed in physical units in the second row of the measuring display.
Selection:
Off; **cm/s**; **cm/min**; **m/s**; **m/min**; **ft/s**; **ft/min**
The value is not displayed when “Off” has been selected.
Implementation with the key or cancellation with and return to the second menu level.

```
Navigate
7.2 Speed flow
pos. counter
7.4 neg. counter
7.5 Sum counter
7.6 Status
   Second menu level
```

```
Edit
7.3 pos. counter

 Off
Selection 1 of 6

Positive count func.
```

Two independent electronic counters are integrated in the MFI447. This selects the unit in which the count result of the positive flow direction is displayed. Selection:
Off; **cm³**; **l**; **hl**; **m³**; **gal**
The value is not displayed when “Off” has been selected.
Implementation with the key or cancellation with and return to the second menu level.

```
Navigate
7.3 pos. counter
neg. counter
7.5 Sum counter
7.6 Status display
7.7 Display change
   Second menu level
```

```
Edit
7.4 neg. counter

 Off
Selection 1 off 6

Negative count func.
```

Two independent electronic counters are integrated in the MFI447. This selects the unit in which the count result of the negative flow direction is displayed. Selection:
Off; **cm³**; **l**; **hl**; **m³**; **gal**
The value is not displayed when “Off” has been selected.
Implementation with the key or cancellation with and return to the second menu level.

Continued on next page

```
Navigate
7.4 neg. counter
Sum counter
7.6 Status display
7.7 Disp. change
7.8 LCD-contrast
   Second menu level
```

```
Edit
7.5 Sum counter

 Off
Selection 1 of 6

Sum counter func.
```

When “sum” is selected, the difference between the positive and negative counters is displayed.
Selection:
Off; **cm³**; **l**; **hl**; **m³**; **gal**
The value is not displayed when “Off” has been selected.
Implementation with the key or cancellation with and return to the second menu level.

```
Navigate
7.5 Sum counter
Status display
7.7 Display change
7.8 LCD-contrast
7.1 Volume flow
   Second menu level
```

```
Edit
7.6 Status display

 Off
Selection 1 of 3

Warning - error
```

This function defines the messages to be shown in row 4 of the display.
Selection:
Off
Warning
Error
The value is not displayed when “Off” has been selected.
Implementation with the key or cancellation with and return to the second menu level.

```
Navigate
7.6 Status display
Display change
7.8 LCD-contrast
7.1 Volume flow
7.2 Speed flow
   Second menu level
```

```
Edit
7.7 Display change

 3 seconds
Selection 1 of 3

Change function
```

If several measured values are available for a display row, this function defines the time for changing to the next value.
Selection:
3 seconds
5 seconds
10 seconds
Implementation with the key or cancellation with and return to the second menu level.

```
Navigate
7.7 Display change
LCD-contrast
7.9 LCD-Brightness
7.1 Volume flow
7.2 Speed flow
   Second menu level
```

```
Edit
7.8 LCD-contrast

 10 %
Selection 1 of 10

Display contrast
```

In this menu item, the LC display contrast may be set.
Selection:
10, 20, 30, 40, 50, 60, 70, 80, 90, 100 %
The contrast depends on both the current temperature in the housing and the personal perception. The value may be set to one of ten levels.
Implementation with the key or cancellation with and return to the second menu level.

```
Navigieren
7.8 LCD-Contrast
LCD-brightness
7.1 Volume flow
7.2 Speed flow
7.3 pos. Counter
   Second menu level
```

```
Edit
7.9 LCD-Brightness

 10 %
Selection 1 of 10

Display brightness
```

In this menu item, the LC display brightness may be set.
Selection:
10, 20, 30, 40, 50, 60, 70, 80, 90, 100 %
The brightness depends on both the current temperature in the housing and the personal perception. The value may be set to one of ten levels.
Implementation with the key or cancellation with and return to the second menu level.

Continued with
“7.1 Volume flow“

Continued on next page

For "8 - Test Functions":

```
Navigate
7 - LC-display
Test funtions
9 - Information
0 - Parameter store
6 - Filling function
  First menu level
```

The function “8 – Test Functions” helps simplify the initial operation and verification of the system. For this purpose, values are simulated at the signal outputs. The simulation value is determined by the functions in Menu 8. Keep in mind that the normal output of measured values is switched off.

```
Navigate
8.3 Analog output
In-/Output 1
8.2 In-/Output 2

  Second menu level
```

```
Edit
8.1 In-/Output 1

 Off
Selection 1 of 2

!! Simulation !!
```

Manual operation of IO function, output 1.
Selection:
Off
On
Implementation with the key or cancellation with and return to the second menu level.

```
Navigate
8.1 In-/Output 1
In-/Output 2
8.3 Analog output

  Second menu level
```

```
Edit
8.2 In-/Output 2

 Off
Selection 1 of 2

!! Simulation !!
```

Manual operation of IO function, output 2.
Selection:
Off
On
Implementation with the key or cancellation with and return to the second menu level.

```
Navigate
8.2 In-/Output 2
Analog output
8.1 In-/Output 1

  Second menu level
```

```
Edit
8.3 Analog output

 0 mA
Selection 1 of 7

!! Simulation !!
```

Manual operation of analog output.
Selection:
0 mA; 3.6 mA; 4 mA; 10 mA; 16 mA; 20 mA; 22 mA
Implementation with the key or cancellation with and return to the second menu level.

Continue with
“8.1 In-/Output 1”

Continued on next page

For "9 - Information":

```
Navigate
8 -Test functions
Informations
0 - Parameter store
6 - Filling function
7 - LC-Display
   First menu level
```

"9 – Information" supplies details about the present device. This includes hardware and software states, as well as information on sensor settings. No parameters can be changed.

```
Navigate
9.7 Life time
ADW-version
9.2 IO-version
9.3 Diameter
9.4 Field frequency
   Second menu level
```

```
Edit
9.1 ADW-version

 FW = 00.02
 HW = 00.02

Actual version
```

The current version of sensor signal processing

Continuation with the ↩ or ▶ key and return to the second menu level.

```
Navigate
9.1 ADW-Version
IO-version
9.3 Diameter
9.4 Field frequency
9.5 Line frequency
   Second menu level
```

```
Edit
9.2 IO-version

 FW = 00.03
 HW = 00.02

Actual version
```

Current version of IO signal processing

Continuation with the ↩ or ▶ key and return to the second menu level.

```
Navigate
9.2 IO-version
Diameter
9.4 Field frequency
9.5 Line frequency
9.6 Calibration val.
   Second menu level
```

```
Edit
9.3 Diameter

 3 mm
Selection 1 of 14

Actual version
```

Nominal device diameter

Continuation with the ↩ or ▶ key and return to the second menu level.

```
Navigate
9.3 Diameter
Fieldfrequency
9.5 Line frequency
9.6 Calibration val.
9.7 Life time
   Second menu level
```

```
Edit
9.4 Field frequency

 25 Hz
Selection 1 of 3

Magneticfieldfrequ.
```

Excitation frequency for the magnetic field of the sensor

Continuation with the ↩ or ▶ key and return to the second menu level.

Continued on next page

```
Navigate
9.4 Field frequency
Linefrequency
9.6 Calibration val.
9.7 Life time
9.1 ADW-version
   Second menu level
```

```
Edit
9.5 Diameter

 50 Hz
Selection 1 of 2

50 / 60 Hz Line
```

Line frequency of the local power supply

Continuation with the or key and return to the second menu level.

```
Navigate
9.5 Line frequency
Calibrationval.
9.7 Life time
9.1 ADW-version
9.2 IO-version
   Second menu level
```

```
Edit
9.6 Calibration val.

 01.730  l
         s

Calibration point
```

Display of the calibration value of the sensor. This may be different for each sensor.

Continuation with the or key and return to the second menu level.

```
Navigate
9.6 Calibration val.
Life time
9.1 ADW-version
9.2 IO-version
9.3 Diameter
   Second menu level
```

```
Edit
9.7 Life time

 00002.7 h

Number of hours
```

Operating hours of the device

Continuation with the or key and return to the second menu level.

Continue with
“9.1 ADW-version”

Contuinued on next page

"0 - Storage":

```
Navigate
9 -Information
Paramet. store
1 - Application data
2 - Sensor input
3 - In-/Output 1
First menu level
```

The "0 – Storage" function manages the data in the device. A total of four data sets are available in the MFI447. Two may be altered; the other two contain the status at delivery and a data set with default data. The "0.1 Data store" function is the central point where the device returns from parameterization mode to measuring mode.

```
Navigate
0.2 Data read
Data store

Second menu level
```

```
Edit
0.1 Data store
Active data
Selection 1 of 3

Data store
```

Manner and Location of Data Storage Selection:

Active data
(the device works with these data)

2. Dataset
(for instance as backup storage)

Do not save
(Do not implement changes)

Return to second menu level with ▶.
Return to measuring mode with ↩.

```
Navigate
0.1 Data store
Data read

Second menu level
```

For "0.1" For "0"

```
Edit
0.2 Data read
Active data
Selection 1 of 4

Data load
```

Selection of data set to be edited.
Selection:

Active data
the device works with these data)

2. Dataset
(e.g. an alternate data set)

Supply set
(delivery data)

Default set
(Manufacturer's setting)

Implementation with the ↩ key or cancellation with ▶ and return to the second menu level.

Finish
Back to the measuring mode

5. Commissioning, Maintenance, and Servicing

5.1 Commissioning

5.1.1 Check list for startup

1. Check that the sleeves are tight.
2. Make sure that the M12 connector is properly screwed on.
3. Check the correct connection after turning on auxiliary power.
4. Check the correct supply voltage on the type identification plate.

5.1.2 Examples for Batch function

Project 1:

Fill containers with a specified volume of 3 liters.
1.1 Solution:
A 24 V solenoid valve with a current draw of < 100 mA is directly connected to the IO1 output (pin 4 of M12 connector). The filling process is started by pressing a pushbutton near the filling valve. The button is connected to the IO2 input (pin 2 of the M12 connector).

1.2 Parameterization:
The following parameters must be set:

3.1 : I/O Function	-> Switching output
3.2 : Hardware Config.	-> NPN
3.3 : Switching function	-> Filling output
4.1 : I/O Function	-> Control input
4.2 : Hardware Config.	-> On>18V Off<6V
4.3 : Control function	-> Batch Start
6.1 : Filling function	-> Normal
6.2 : Target Volume	-> 3.000 l

Notes:
- Place the solenoid valve close to the container to reduce any shortfall
- Install the MFI in an area where air bubbles cannot persist

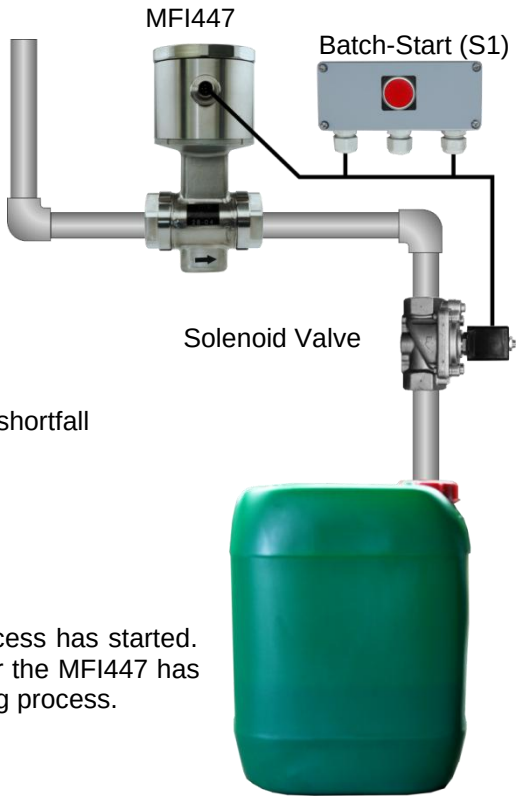

Figure 15

1.3 Process:
Pressing the pushbutton S1 tells the MFI447 that the filling process has started. The internal volume counter is reset and the valve, opened. After the MFI447 has measured 3.0 liters, the valve is closed, which completes the filling process.

1.4 Optimizations:
A very slowly switching solenoid valve can produce a trailing volume that affects the filling accuracy. In this case, the target volume should be reduced by this amount, or the corrective function trailing volume, described in 6.1 Filling Function, should be activated. This function calculates the average trailer volumes of the last 5 measurements and uses this value to adjust the valve-closing timing.

1.5 Modifications:
The S1 pushbutton can also be an SPC output. If the solenoid valve M1 needs more power than 100 mA, the use of an interconnected relay is recommended.

Project 2:

Water is to be filled into barrels of different sizes (5, 10, and 20 liters), and a saline solution (approx. 150 mL per liter of water) is to be added. The quantity of the solution depends on the conductivity of the saline solution, as well as the temperature and the quantity of the water. The stored program control (SPC) calculates the optimal mixing ratio and sends the result with two 0 - 10V signals to the MFIs. For cleaning purposes, the valves can be manually controlled by the SPC. The water and saline solution supplies should also be monitored. The operator manually starts the filling process by pushing the function keys of the MFIs.

2.1 Solution:
Two MFIs, two solenoid valves, and one SPC with four analog inputs, two analog outputs, two switching outputs, and two switching inputs are required.

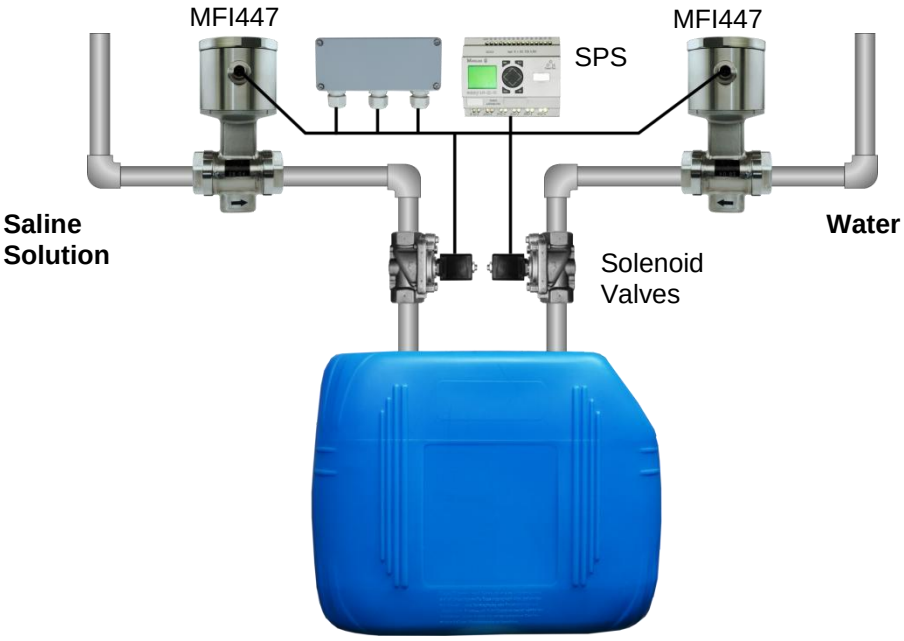

Figure 16

2.2 Parameterization:
The following parameters must be set:

	Saline Solution	**Water**
1.4 : Function key	-> Batch Start	-> Batch Start
3.1 : I/O Function	-> Switching output	-> Switching output
3.2 : Hardwarekonfig.	-> PNP	-> PNP
3.3 : Switching function	-> Filling output	-> Filling output
4.1 : I/O Function	-> Analog input	-> Analog input
4.2 : Volume at 0 Volt	-> 0.750 l	-> 5.00 l
4.3 : Volume at 10 Volt	-> 3.00 l	-> 20.0 l
6.1 : Filling function	-> Normal	-> Normal

Continued next page

2.3 Process:
analog output 2, the SPC has predetermined target values of 0 V for 5 liters, 3.333 V for 10 liters, and 10 V for 20 liters for the MFI447 – 2. The MFI447 display indicates the target value. Pressing the function key of the MFI447 – 2 starts the water-filling process. The switching output IO1 of the MFI – 2 is switched on, and the SPC transmits the signal from switching input 2 to switching output 2 and the valve. When the target volume is reached. the IO1 switches off, and the SPC closes the M2 valve. Next, the target volume for the saline solution is calculated from the amount, conductivity, and temperature of the water. This value is transmitted to the MFI447 –1 through analog output 1 of the SPC. Now the system operator can start the dosing with the MFI447 – 1 function key. This process, described for the M2 valve, above, is now repeated for the M1 valve. The SPC monitors the power outputs of the MFIs during the two filling processes. These processes are an indicator for the filling level of the storage tanks. A smaller amount in the tank indicates a slower flow, which causes the power output to be reduced. An advance warning for empty tanks can be generated based on empirical indications.

2.4 Optimizations:
Here, too, the trailing-water function can be activated for the water. This is not recommended for saline solutions, since the default amount should be adopted without any further averaging.

5.2 Maintenance

Housing:
When cleaning the device, make sure that its connections are firm and tight. The housing surface and gaskets must not be harmed by cleansers.
If the housing is cleaned with a high-pressure cleaning device, make sure the electric connection is not sprayed directly. Cleanser deposits on the thread should be avoided.

Sensor:
Depending on the application, contamination on the measuring-tube wall or electrode tip may form and affect the measuring result. If the fluid is prone to severe contamination, regular cleaning is recommended.
During cleaning, it is essential not to damage the measuring electrodes. If cleansers are used, make sure that they do not harm any materials.

5.3 Servicing

The device can only be repaired by the manufacturer. Please observe Item 8, "Return to Manufacturer."

6. Technical Specifications

Power Supply

Supply Voltage	: 18..30 V DC, max. 100 mA
Electrical Connection	: 5-Pin Round Connector M12
CE Conformity	: EN 61326: 2007-05

Ambient Requirements

Ambient Temperature	: -20.+60 °C
Storage Temperature	: -20.+60 °C
Climate Classification	: EN 60068-2-38:2010-06
Vibrations	: EN 60068-2-6, GL test2

Certification

EHEDG Certificate No.	: 148/18.10.2007

Input

Measuring Range	: 0..12 m/s
Basic Acccuracy	: ±0.5 % of Measuring Range, optionally ±0.3 % of Measuring Range
Minimum Fluid Conductivity	: > 5 µS
Time Constant	: 0.2..15.0 s
Process Temperature	: -20..+130 °C, 150 °C < 60 min CIP-/SIP-capable
Process Pressure	: DN3..DN40 ≤ 40 bar DN50, DN80 ≤ 16 bar DN65, DN100 ≤ 10 bar
Process Material	: Inner PFA coating, FDA-compliant Electrodes 1.4539 Tube connection 1.4435 Gasket EPDM (FDA-compliant) Food-Safe According to EHEDG
Process Connection	: TriClamp, SMS, DIN 11851 Milk Pipe, DIN 11864, Aseptic Südmo Connector Tuchenhagen Flange, APV Flange

Material

Tube Standard	Material	3.1 Certificate
DIN 11850 Rows 1 and 2	1.4404	-
DIN 11866 Row A	1.4435	✓
DIN 11866 Row B (DIN ISO1127)	1.4435	✓
DIN 11866 Row C (ASME)	1.4435	✓
OD Tube (ASME	1.4404	-
ISO2037	1.4404	-

Outputs

Analog Output	: 0/4..20 mA
Voltage Drop	: < 2.7 V
Switching Outputs	: Transistor PNP / NPN , Push/Pull; max. 30 V / 100 mA short-circuit-proof Programmable as: - Pulse output , max. 10 kHz - Switching output - Control input - Analog input
Galvanic Isolation	: Sensor/supply voltage, outputs/housing
Housing	: Stainless steel housing, 79 mm Turnable by ±170°
Material	: 1.4305
Kind of Protection	: IP67 / IP69K
Display	: Graphics LCD, Background-lighted
Displayed Units	
- Volume	: cm³, l, hl, m³, gal
- Flow	: cm³/s cm³/min, cm³/h, l/s, l/min, l/h, hl/s, hl/min, hl/h, m³/s, m³/min, m³/h, gal/min, percent
- Flow Rate	: cm/s, cm/min, m/s, m/min, ft/s, ft/min
- Counter	: cm³, l, hl, m³, gal
Control	: 4 capacitive keys

6.1 Mechanical Design/Dimensions

Up to Nominal Diameter DN40

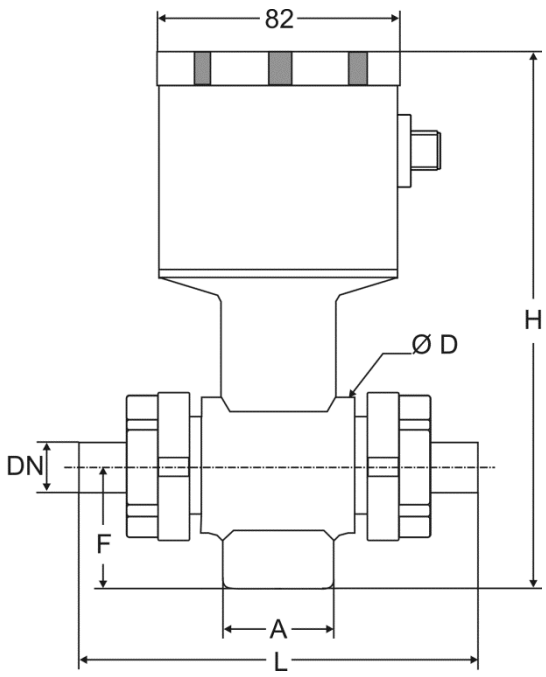

Figure 17

From Nominal Diameter DN50

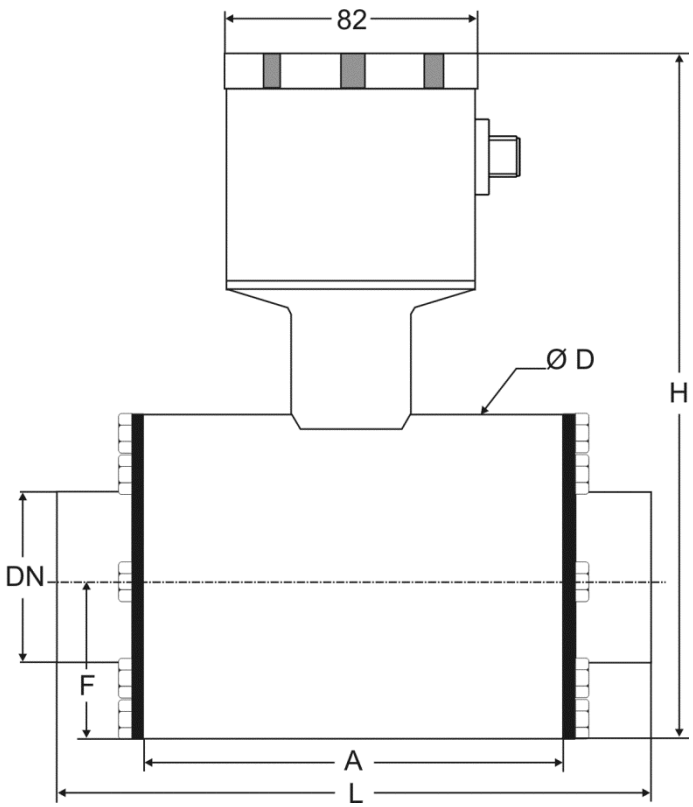

Figure 18

Basic Dimensions with Welded Connection
(Measurements in mm)

Ø MFI447 DN	Connection DN	D	H	A	F	L
3	10	44	175	37	38,5	127
4	10	44	175	37	38,5	127
6	10	44	175	37	38,5	127
8	10	44	175	37	38,5	127
10	10	44	175	37	38,5	127
15	15	44	175	37	38,5	127
20	20	63	185	42	43	132
25	25	63	194	54	48	149
32	32	78	203	62	53	166
40	40	78	212	67	57	171
50	50	100	208	128	50	173
65	65	116	230	114	58	165
80	80	133	247	114	67	169
100	100	160	275	114	81	199

Valid for DIN 11850 Row 1, DIN 11850 Row 2 and DIN 1866 Row A

More measurement tables for process connections on next page

6.2 Dimensions of Other Process Connections

Total Length L [mm] of the Dimensional Drawings

DIN 11850 Row 2 / DIN 11866 Row A

DN	TriClamp DIN 32676	Milk Pipe DIN 11851*	Aseptic Nipple DIN 11864-1/Format A	APV-Flange w. Groove*
3..10	163	169	165	--
15	163	169	165	--
20	168	180	174	--
25	192	207	201	197
32	209	230	226	--
40	214	237	233	219
50	216	243	235	221
65	221	245	237	213
80	225	259	253	217
100	255	307	299	247

* only for DIN 11850 Row 2

OD Tube / DIN 11866 Row C

DN	TriClamp Inch	Milk Pipe DIN 11851*	Aseptic Nipple DIN 11864-1/Format A
¼“	--	--	--
⅜“	--	--	--
½“	143.6	--	200.2
¾“	143.6	--	200.2
1“	175.5	191.0	184.6
1 ½“	267.0	290.0	286.0
2“	267.0	294.0	286.0
2 ½“	280.0	304.0	296.0
3“	225.0	249.0	253.0
4“	255.0	307.0	299.0

* only for OD Tube

DIN11866 Row B (ISO1127)

DN	TriClamp ISO	Aseptic Nipple DIN 11864-1/Format A
3..10	162.6	168.6
15		
20		178.6
25	267.0	284.0
32		286.0
40		
50	280.0	296.0
65	225.0	253.0
80		269.0
100	--	--

ISO2037

DN	SMS Threaded Connector
3..10	--
15	
20	
25	179
32	200
40	211
50	213
65	
80	217
100	269

6.3 Ordering Key

6.3.1 Basic Device MFI447

	1.		2.		3.		4.
MFI447		-		-		-	

1.	**Nominal Diameter**	
	003, 004, 006, 008, 010, 015, 020, 025, 032, 040, 050, 065, 080, 100	
2.	**Electrode Material**	
	0	Stainless Steel 1.4539
3.	**Electrode Shape**	
	0	Flush-Mounted
4.	**Options**	
	00	No option
	01	Accuracy ±0.3 % for DN < 20 mm
	02	Dosage Control

Table 7

* for nominal tube diameters < DN10, the measuring tube in the MFI447 will be reduced to the selected smaller DN.

6.3.2 Process Connection

	1.	2.	3.		4.
APF			**0**	-	

DIN 11850 Row 1 (Operational Area: Food)

1.	**Connector Standard**	
	1	DIN 11850 Row 1
2.	**Version**	
	1	Welded Nipple
3.	**0**	
4.	**Nominal Tube Diameter DN ***	
	010, 015, 020, 025, 032, 040, 050	

DIN 11850 Row 2 (Operational Area: Food)

1.	**Connector Standard**	
	2	DIN 11850 Row 2
2.	**Version**	
	1	Welded Nipple
	2	TriClamp
	3	Milk Pipe DIN 11851 Threaded Connector
	4	Sterile Screw Connection DIN 11864
3.	**0**	
4.	**Nominal Tube Diameter DN ***	
	010, 015, 020, 025, 032, 040, 050, 065, 080, 100	

DIN 11866 Row A (Operational Area: Pharmaceuticals)

1.	**Connector Standard**	
	3	DIN 11866 Row A
2.	**Version**	
	1	Welded Nipple
	2	TriClamp
	4	Sterile Screw Connection DIN 11864
3.	**0**	
4.	**Nominal Tube Diameter DN ***	
	006, 008, 010, 015, 020, 025, 032, 040, 050, 065, 080, 100	

DIN 11866 Row B (Operational Area: Pharmaceuticals)

1.	**Connector Standard**	
	4	DIN 11866 Row A
2.	**Version**	
	1	Welded Nipple
	2	TriClamp
	4	Sterile Screw Connection DIN 11864
3.	**0**	
4.	**Nominal Tube Diameter DN ***	
	006, 008, 010, 015, 020, 025, 032, 040, 050, 065, 080, 100	

DIN 11866 Row C (Operational Area: Pharmaceuticals)

1.	**Connector Standard**	
	5	DIN 11866 Row C
2.	**Version**	
	1	Welded Nipple
	2	TriClamp (from ½“)
	4	Sterile Screw Connection DIN 11864 (from ½“)
3.	**0**	
4.	**Nominal Tube Diameter DN ***	
	006 (¼“) , 008 (⅜“), 015 (½“), 020 (¾“), 025 (1“), 040 (1 ½“), 050 (2“), 065 (2 ½“), 080 (3“), 100 (4“)	

OD Tube (Operational Area: Food)

1.	**Connector Standard**	
	6	OD Tube
2.	**Version**	
	1	Welded Nipple
	2	TriClamp (from ½“)
	4	Sterile Screw Connection DIN 11864 (from ½“)
3.	**0**	
4.	**Nominal Tube Diameter DN ***	
	006 (¼“) , 008 (⅜“), 015 (½“), 020 (¾“), 025 (1“), 040 (1 ½“), 050 (2“), 065 (2 ½“), 080 (3“), 100 (4“)	

ISO2037 (Operational Area: Food)

1.	**Connector Standard**	
	7	ISO2037
2.	**Version**	
	1	Welded Nipple
	2	TriClamp (from ½“)
	4	Sterile Screw Connection DIN 11864 (from ½“)
3.	**0**	
4.	**Nominal Tube Diameter DN ***	
	025, 032, 040, 050, 065, 080, 100	

6.4 Accessories

For process adaptors and connection tubes, see special product information “Product Information Accessories Hygienic Designed.”

6.5 Trouble-Shooting

Error	Cause	Correction
Device shows unstable measured values	No fluid in sensor	Fill measuring tube completely with fluid
	Air bubbles in fluid	Deaerate or select different installation location
	Fluid has insufficient conductivity	Measuring mode not suitable for fluid
Device shows warnings for pulse and/or power output.	Selected measuring range too small	Adjust measuring range to flow
Device shows no value for flow	Selected measuring range too big	Adjust measuring range to flow
	Electronics defective	Send device to manufacturer

Table 8

7. Device Transport and Storage

For transport, the packaging for the housing must be protective and free from distortion (no machine wrapping).
The device must be stored according to the ambient requirements specified in the technical specifications.

8. Return to Manufacturer

The legal provisions for the protection of the environment and our personnel require that the returned devices having had contact with liquids can be handled without risk for the environment and personnel.

If you have to return a device to us for verification or repair, we are asking you to follow the procedure below very carefully:

On the GHM homepage, you can download a return form by clicking on “Downloads/Formular.”
The repair can be made quickly and without further inquiry, as long as

1. Each device has a completed form
2. The device is cleaned, and the packaging prevents the device from being damaged
3. The completed form—and, possibly, a safety datasheet for the measuring fluid—is attached to the packaging.

9. Discard

When discarding the device, the material must be isolated, and the device components as well as the packaging must be recycled. At this time, the relevant legal provisions and guidelines must be followed.
The device must not be discarded with the general garbage. If a device is to be discarded, send the device with the completed return form (see Item 8) directly to us. We will discard the device in an appropriate, professional manner.

10. Company Information

Martens Elektronik GmbH, 22885 Barsbüttel, Kiebitzhörn 18
A GHM Messtechnik GmbH company
CEO: Günther Oehler
Place of fulfillment and place of jurisdiction *Copyright:*

11. Parameter Table for Factory/Customer Settings

1. Menu Level	2. Menu Level	Factory Settings	Custom Settings
1 – Application Data	1.1 Tag text	MFI447	
	1.2 Language	German	
	1.3 Counter reset	Don´t clear	
	1.4 Function key	Off	
2 – Sensor Input	2.1 Range	Depending to DN	
	2.2 Time constant	01.0 s	
	2.3 Leak flow Volume	03.0 %	
	2.4 Dfl.-Direction	Forward	
	2.5 Zero point	No input	
3 – Input/Output 1	3.1 I/O Function	Pulse output	
	3.2	PNP (Push)	
	3.3	+/- Flow	
	3.4	DN3..20: 10.000 Pulses/l DN25..100: 1.000 Pulses/l	
	3.5	Automatic	
4 – Input/Output 2	4.1 I/O Function	Switching Output	
	4.2	PNP (Push)	
	4.3	Flow direction	
	4.4	-	
	4.5	-	
5 – Analog Output	5.1 Function	+/- Flow	
	5.2 Range	4..20/22 mA	
6 – Filling Function	6.1 Filling Function	Off	
	6.2 Target Volume	-	
7 - LC-Display	7.1 Flow Display	l/s	
	7.2 Flow Rate	Off	
	7.3 positive Counter	Off	
	7.4 negative Counter	Off	
	7.5 Sum Counter	l	
	7.6 Status Display	Warnings	
	7.7 Dispaly Change	5 Seconds	
	7.8 LCD Contrast	50 %	
	7.9 LCD Brightness	50 %	

Table 9

12. EG Certificate of Conformity

EG-KONFORMITÄTSBESCHEINIGUNG
EC-CERTIFICATE OF CONFORMITY

Martens Elektronik GmbH CE D-22885 Barsbüttel

Zertifikat-Nr.:
Certificate No.:

MFI447.001

EU

Hersteller / Importeur: Manufacturer / Importer:	*Martens Elektronik GmbH* *Kiebitzhörn 18* *D-22885 Barsbüttel*
Produkt: Product:	MFI447
Produktbeschreibung: Object description:	*Durchflussmessgerät* Mag-Flow-Meter

Wir erklären in alleiniger Verantwortung, dass das bezeichnete Produkt die Schutzanforderungen der Europäischen Richtlinien erfüllt.
We hereby declare in sole responsibility that the designated product fulfills the safety requirements of the European directives.

Erfüllung der Niederspannungsrichtlinie 2006/95/EG
Fulfills the low voltage directive 2006/95/EG

Prüfung nach der Norm: Tested in compliance with norm:	EN 60664-1: 2008-01

Erfüllung der EMV-Richtlinie 2004/108/EG
Fulfills the EMC directive 2004/108/EG

Prüfung nach den Normen: Tested in compliance with norms:	EN 61326-1: 2006-10 EN 61326-2-3: 2007-05
Datum der Erstanbringung des CE-Zeichens auf das Produkt Date of first application of the CE mark to the product	04.2012
Ort, Datum: Place, date:	Barsbüttel, den 25.04.2012
Rechtsverbindliche Unterschrift: Legally binding signature:	..... Geschäftsleitung, manager