Martens Elektronik GmbH
Kiebitzhörn 18 ● 22885 Barsbüttel ● Germany
Fon +49 (0) 40 - 670 73 - 0 ● Fax - 288
www.martens-elektronik.de ● info@martens-elektronik.de

Clamp-on Temperature Sensor GTL720/GTL723

- **Simple mounting via clamp-on adapter without media contact**
- **High accuracy even without thermal compound**
- **Fast response time**
- **Replacing/cleaning of the sensor without process interruption**
- **Pt100 sensor 3-wire connection or transmitter 4..20 mA, 2-wire connection**
- **Transmitter programmable via GTL Configuration tool**
- **GTL720 applicable for Ex areas**

Characteristics

Clamp-on temperature sensors GTL720 and GTL723 are specified to measure temperatures without media contact.
The measuring tip is directly located at the pipe wall and will be fixed by the clamp-on adapter on the pipe. This measuring process provides a high accuracy and a fast response time, which is often better than a measuring principle with media contact.

Technical data

Temperature sensor : Pt100, class A acc. to DIN EN 60751
GTL720 *without transmitter*
Measuring range : -20..+160 °C
Ambient temperature : -20..+85 °C
Ex-Protection : Ex II 2G [Ex ia] IIC T3/T4/T5 (simple apparatus)
Ui = 30 V, Ii = 25 mA, Pi = 30 mW
GTL723 *with transmitter*
Measuring range : -20..+100 °C, short time 160 °C < 30 min (option 01 = max.160 °C permanent), programmable, minimal measuring span 50 °C
Ambient temperature : -20..+60 °C

Protection class : IP67, in connection with mounted M12 plug

Electrical connection
Round plug : 4-pole M12x1
GTL720
Pt100 sensor current : max. 10 mA (recommended 0.3..1 mA)
GTL723
Supply voltage : 10..30 V DC, loop powered
Error indication : programmable

Response time/accuracy [1)]
Data without thermal compound, medium temperature 120 °C
Rise time T_{90} : approx. 10 s
Accuracy : up to 2.5 % f.s. without pipe wall adjustment
: up to 0.6 % f.s. with pipe wall adjustment [2)]
Data with thermal compound, medium temperature 120 °C
Response time T_{90}: approx. 3 s
Accuracy : up to 1 % of f.s. without pipe wall adjustment
: up to 0.2 % of f.s. with pipe wall adjustment [2)]
Temperature coefficient : 0.02 %/°C

[1)] Measurement results depending to the mounting situation. See next page
[2)] Measuring values are valid only for GTL723

Output : 4..20 mA

Material
Temperature sensor
Spring : 1.4310
Sensor usage : PEEK
Sensor tip : 935er silver
Lid : 1.4305
M12 plug : PA/gold plated contacts
Weight : 17 g
Clamp-on adapter
Adapter : 1.4405
Case : 1.4305
Adapter insertion : Silicone HTV/PTFE
Weight
Frame size (Bg) 1 : 120 g
Frame size (Bg) 2 : 170 g
Frame size (Bg) 3 : 395 g
Frame size (Bg) 4 : 995 g

Dimensions

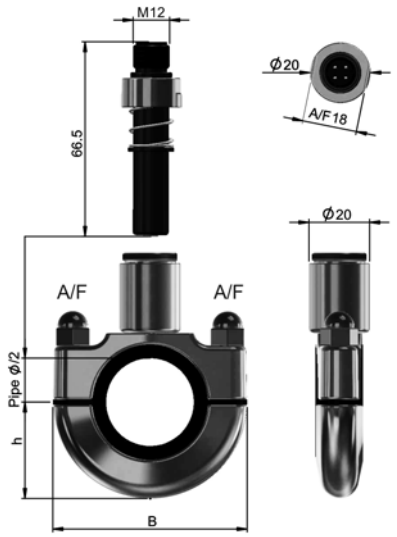

Frame size (Bg)	Pipe Ø [mm]	B [mm]	h [mm]	A/F [mm]
1	13.0..19.9	51	26	11
2	20.0..33.9	64	32	11
3	34.0..53.0	92	46	14
4a	60.3..75.9	133	68	14
4b	76.0..88.9	133	68	14

Continue next page

Martens Elektronik GmbH
Kiebitzhörn 18 ● 22885 Barsbüttel ● Germany
Fon +49 (0) 40 - 670 73 - 0 ● Fax - 288
www.martens-elektronik.de ● info@martens-elektronik.de

Connection diagrams

GTL720 passive sensor

Connection variation 1 (standard)

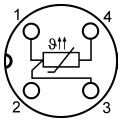

Connection variation 2 (customized)

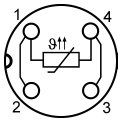

GTL723 Transmitter

Supply voltage

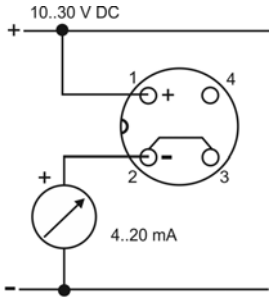

Ordering code

Note:
In place of order please specify the clamp-on sensor and the clamp-on adapter.
Order example:
Temperature sensor **GTL** without transmitter,
with clamp-on adapter **RLA** DN32:
GTL720-0-00-0-00 + RLA424-00

Clamp-on Temperature Sensor

	1.		2.		3.		4.		5.
GTL	☐	-	☐	-	☐	-	☐	-	☐

1.	**Design / input**	
	720	Pt100 (for Ex-area´s applicable)
	723	Pt100 with transmitter 4..20 mA
2.	**Electrical connection**	
	0	GTL720 variation 1 (standard), M12 plug
	1	GTL720 variation 2 (customized), M12 plug
	2	GTL723 2-wire, 4..20 mA, M12 plug
3.	**Transmitter GTL723, default ranges** (programming with GTL Configuration tool via PC or frontside key)	
	00	without transmitter (only GTL720)
	M1	measuring range -10..+40 °C
	M2	measuring range 0..50 °C
	M3	measuring range 0..100 °C
	M4	measuring range 0..150 °C temperatures > 100 °C max. 30 min
	MB	transmitter with customized range [°C] (please state in clear text e.g. 20..130 °C)
4.	**Pipe wall adjustment for SS-type pipes (only GTL723)**	
	0	not active
	1	without thermal compound
	2	with thermal compound
5.	**Options**	
	00	without option
	01	High temperature version for GTL723; max. permanent temperature160°C

Clamp-on Adapter

	1.		2.
RLA	☐	-	☐

1.	**Pipe diameter**		
Bg.1	120	12.0 mm: DN10	DIN11850R1
	130	13.0 mm: DN10 12.7 mm: ½“	DIN11850 r2 DIN11866 rC / ASME-BPE
	180	18.0 mm: DN15	DIN11850 r1
	190	19.0 mm: DN15 19.0 mm: ¾“	DIN11850 r2 DIN11866 rC / ASME-BPE
Bg.2	213	21.3 mm: DN15	DIN11866 rB
	230	23.0 mm: DN20	DIN11850 r2
	254	25.4 mm: 1“	DIN11866 rC / ASME-BPE
	269	26.9 mm: DN20	DIN11866 rB
	280	28.0 mm: DN25	DIN11850 r1
	290	29.0 mm: DN25	DIN11850 r2
	337	33.7 mm: DN25 34.0 mm: DN32	DIN11866 rB DIN11850 r1
	350	35.0 mm: DN32	DIN11850 r2
Bg.3	381	38.1 mm: 1 ½“	DIN11866 rC / ASME-BPE
	400	40.0 mm: DN40	DIN11850 r1
	410	41.0 mm: DN40	DIN11850 r2
	424	42.4 mm: DN32	DIN11866 rB
	483	48.3 mm: DN40	DIN11866 rB
	508	50.8 mm: 2“	DIN11866 rC / ASME-BPE
	520	52.0 mm: DN50	DIN11850 r1
	530	53.0 mm: DN50	DIN11850 r2
Bg.4a	603	60.3 mm: DN50	DIN11866 rB
	635	63.5 mm: 2 ½“	DIN11866 rC / ASME-BPE
	700	70.0 mm: DN65	DIN11850 r2
Bg.4b	761	76.1 mm: DN65 76.2 mm: 3“	DIN11866 rB DIN11866 rC / ASME-BPE
	850	85.0 mm: DN80	DIN11850 r2
	889	88.9 mm: DN80	DIN11866 rB
	999	customized diameter on request	
2.	**Options**		
	00	without option	

Accessories:

Thermal compound
Type
WLP10S, containing silicone
- high thermal conductivity of 10.0 W/mK
- not drying out, silicone parts not fleeting
- Storage time up to 12 months at normal ambient conditions
- Syringe containing 3ml + pipette
  color silver-gray

Type:
GTL - Configuration tool
Programming of the GTL7XX via PC

Calibration certificate: on request

For the evaluation of Pt100 to signals we recommend our transmitter and temperature displays (PI-transmitter, PI-displays and PI-temperature).
Temperature curves see next page

Response time at different conditions
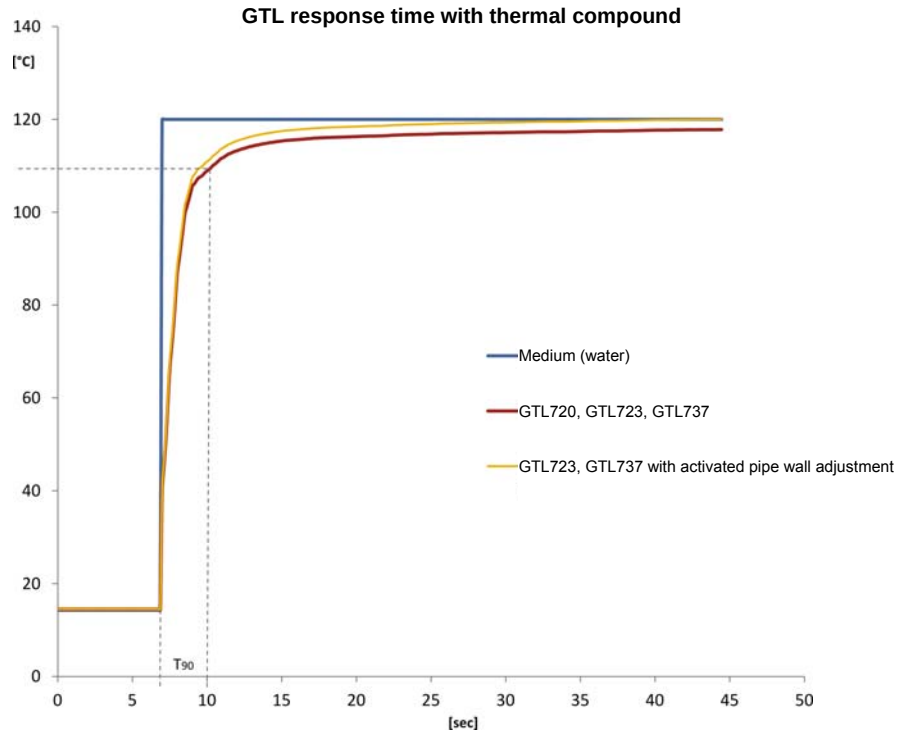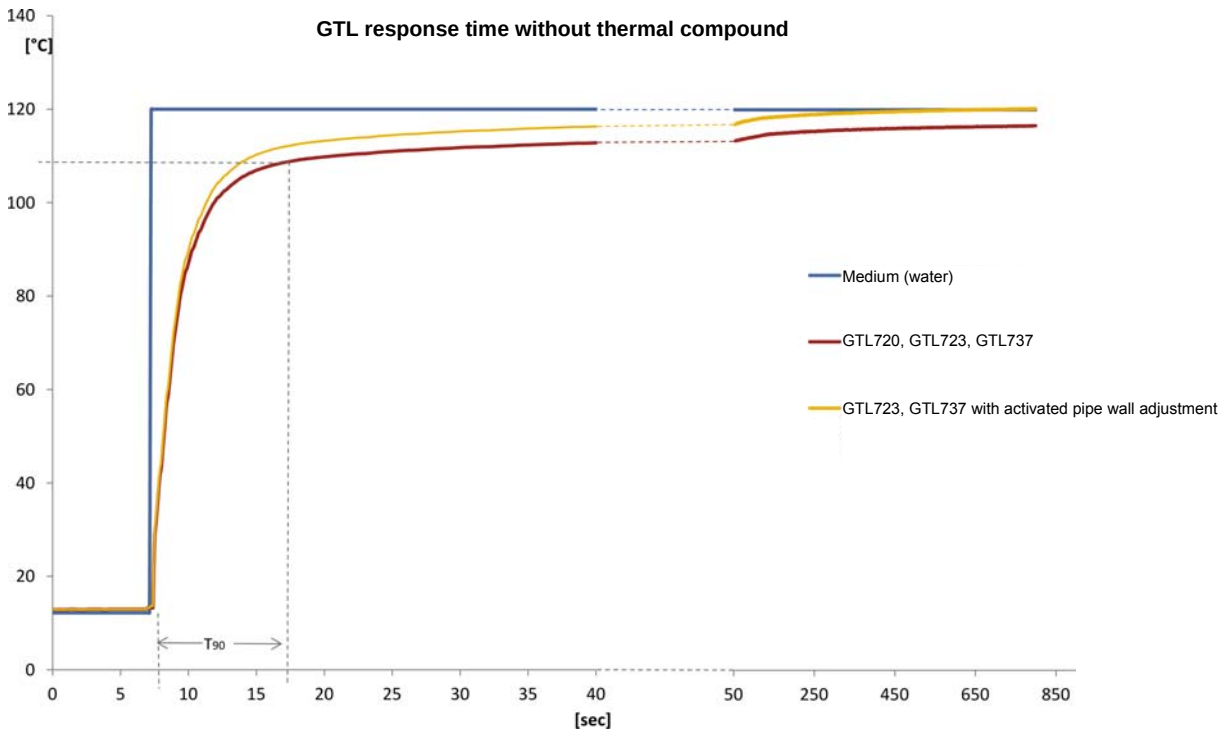
Note: reference SS-type pipeline with 1.5 mm pipe wall