Martens Elektronik GmbH
Kiebitzhörn 18 ● 22885 Barsbüttel ● Germany
Fon +49 (0) 40 - 670 73 - 0 ● Fax - 288
www.martens-elektronik.de ● info@martens-elektronik.de

Product information **Hygienic designed**

Capacitive Level Switch MLC437

- **2-port isolation**
- **Microprocessor controlled measurement**
- **Parametrization via build-in display and GHM*ware* with Mini USB interface**
- **No moving parts in the medium**
- **2 switching outputs**
- **Analog output for DK value**
- **Switching functions programmable**
- **Condensate-stability type**

Technical data

Power supply	
Supply voltage	: 18..30 V DC, max. 100 mA
Electrical connection	: M12x1 plug
CE-conformity	: EN 61326:2007-05
Ambient conditions	
Ambient temperature	: -20..+60 °C
Climatic class	: EN 60068-2-38:2010-06
Vibration class	: EN 60068-2-6, GL test2
Certifications	
EHEDG certificate no.	: 28/2011
Sensor	
Radiated frequency	: 40.68 MHz, <1 mW
Measuring range	: DK-value 1.5..175
Initialization time	: 3 s
Process temperature	: -20..+100 °C, 140 °C < 30 min CIP-/SIP-capable
Process pressure	: -1..+10 bar
Process material	: PEEK, FDA conform food-safe acc. to EHEDG
Process connection	: G ½
Stud torque	: 5..10 Nm
Mounting direction	: arbitrary, see mounting notes
Outputs	
Switching output	: transistor PNP / NPN programmable max. 30 V / 100 mA
-Response time	: 20 ms
Analog output	: active 0/4..20 mA, burden <600 Ω
-Response time	: programmable from 0.1..10 s
Isolation	: sensor, case / supply, outputs
Case	
Material	: 1.4305
Display window	: Acrylic glass (PMMA)
Protection class	: IP67 / IP69K

Dimension

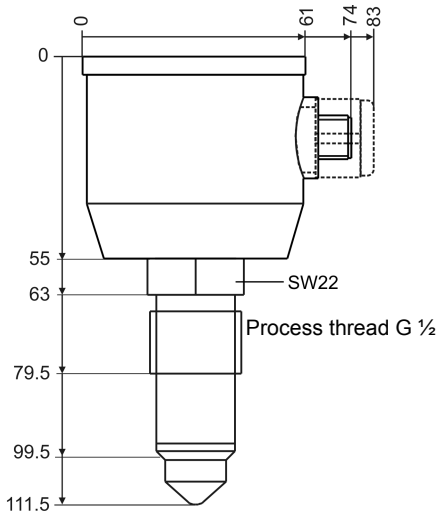

Connection diagram

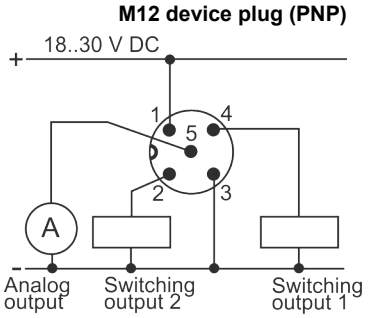

Cable colors:
1 = brown, 2 = white, 3 = blue, 4 = black, 5 = gray

Ordering code

MLC437 - [1.] - [2.] - [3.] - [4.]

1.	**Outputs**	
	0	PNP / NPN programmable and analog output 0/4..20 mA
2.	**Electrical connection**	
	0	M12 plug
3.	**Inspection window**	
	0	Lid with window for LCD display
4.	**Options**	
	00	without option
	Accessory	
	ACI211	USB connection cable

Additional accessories:
ACH connection cables
APH process connection
see separate product information **GHMadapt/Accessories.**